Ex

Ex

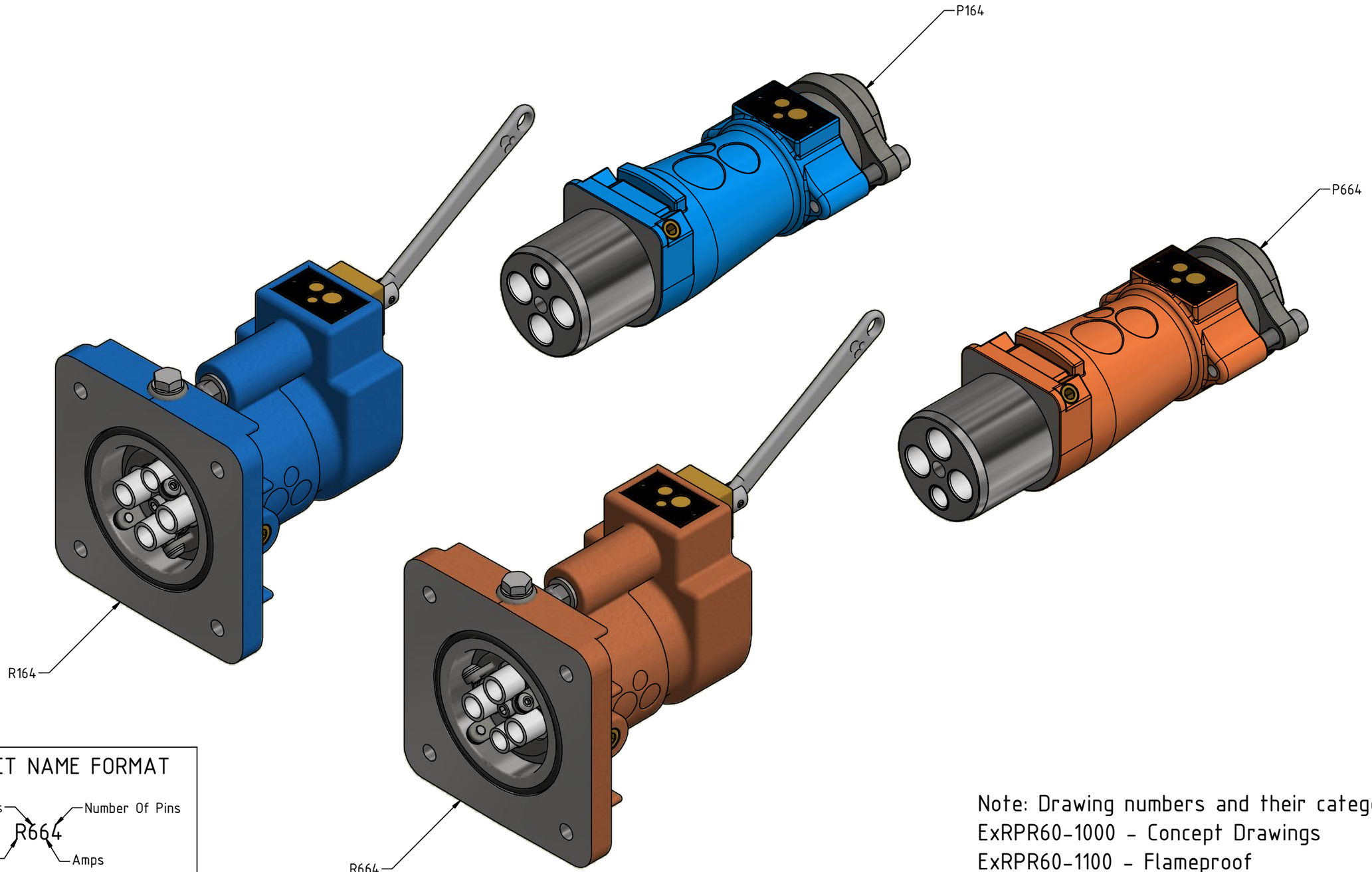

PRODUCT NAME FORMAT

Volts — R664 — Number Of Pins

Amps

P = Plug

R = Receptacle

Note: Drawing numbers and their category
ExRPR60-1000 - Concept Drawings
ExRPR60-1100 - Flameproof
ExRPR60-1200 - Product Range
ExRPR60-1300 - General

This drawing forms part of the documentation for
Certification: ANZEx 16.2005X Issue: 7
Alterations not authorised by Simtars may invalidate this certification.

AUSPROOF PTY LTD

© COPYRIGHT RESERVED

DRAWN BY G.Coumessos								
DIMENSIONS (Metric-millimetre-mm) UNLESS OTHERWISE SPECIFIED	X.X 0.1 X.XX 0.05		APPROVED BY C.Taylor	DRAWING NUMBER ExRPR60-C1000	PRODUCT NAME 60 Series Index CUSTOMER COPY	2	07/10/2020	D.Jensen	Updated to IECEx Standards
ALL SURFACES TO UNLESS OTHERWISE NOTED			SIZE A3			REVISION NUMBER	REVISION DATE	REVISION BY	REVISION DESCRIPTION

Ex

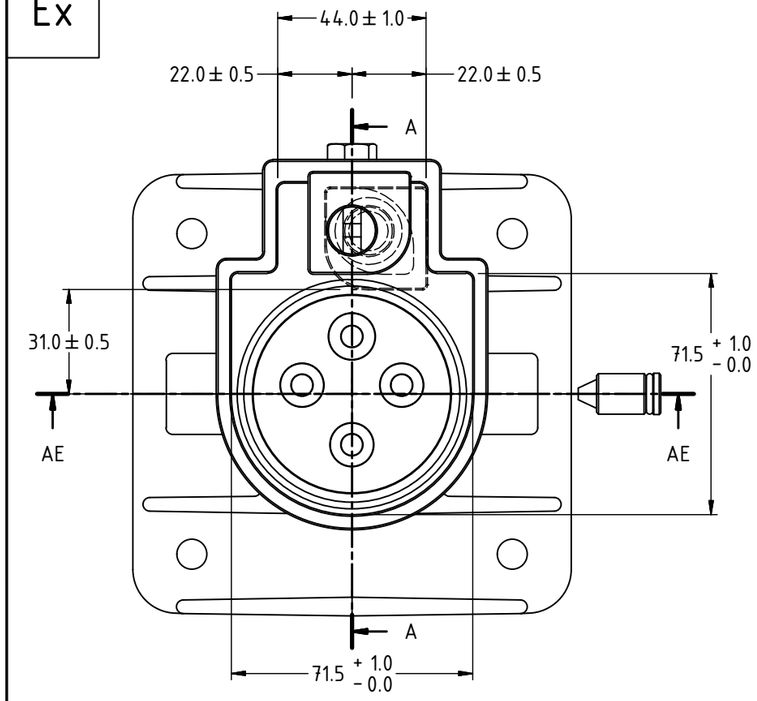

FRONT VIEW

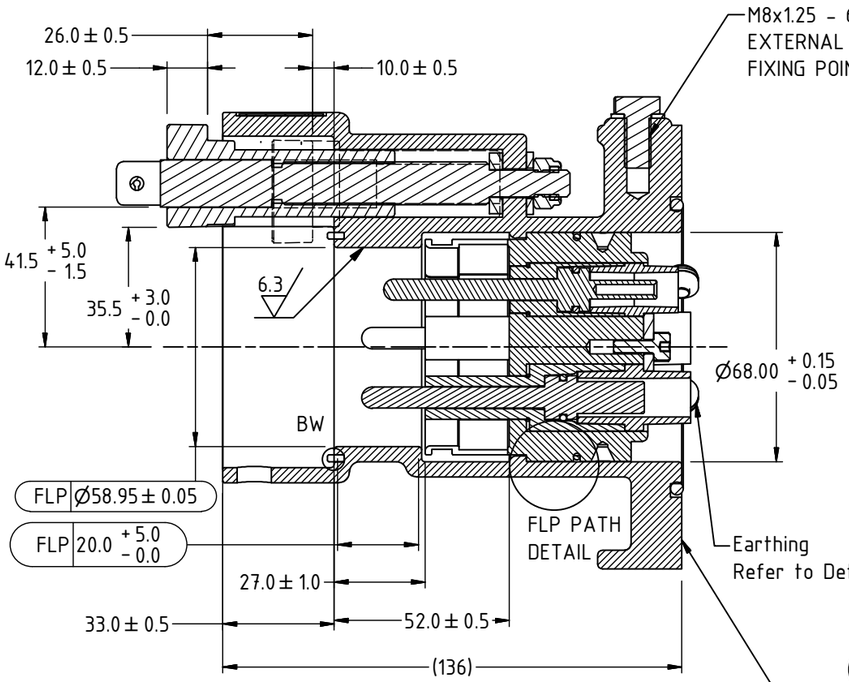

FLAMEPROOF PATH
SECTION A-A

GAP ≤ 0.4
BETWEEN RECEPTACLE
AND ENCLOSURE

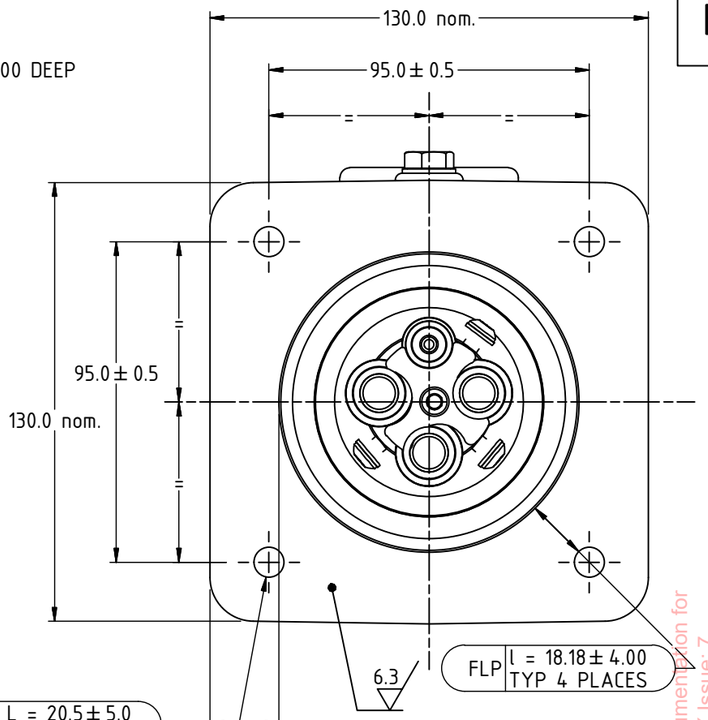

REAR FLANGE
FLAME PROOF DETAILS

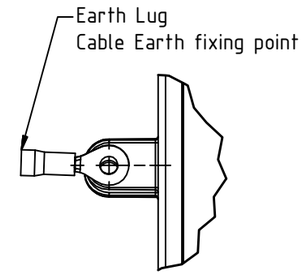

DETAIL E

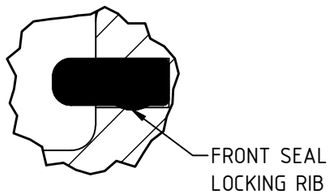

DETAIL BW

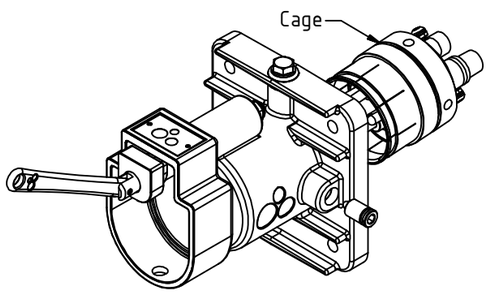

ASSEMBLY

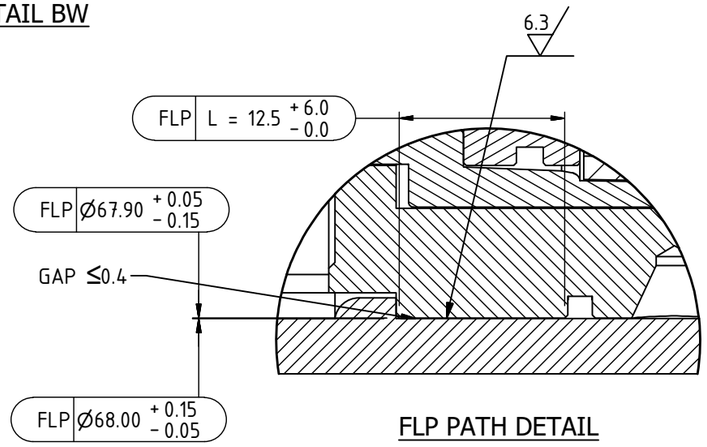

FLP PATH DETAIL

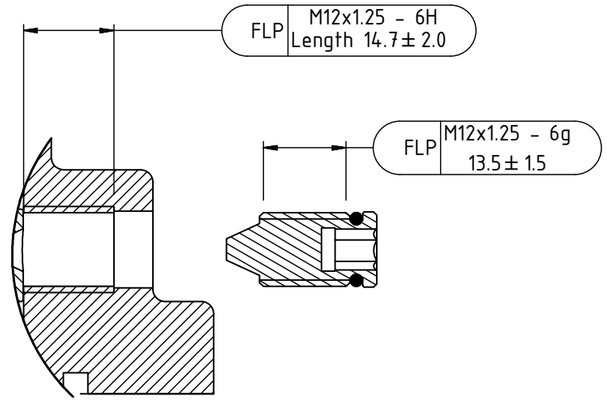

CAGE LOCKING SCREW
FLAMEPROOF SECTION AE

This drawing forms part of the documentation for
Certification: ANZEx 16.2005X Issue: 7
Alterations not authorised by Simtars may invalidate this certification.

AUSPROOF PTY LTD							
© COPYRIGHT RESERVED			DRAWN BY G.Coumessos				
DIMENSIONS (Metric-millimetre-mm) UNLESS OTHERWISE SPECIFIED	X.X 0.1 X.XX 0.05		APPROVED BY C.Taylor	DRAWING NUMBER ExRPR60-C1100	PRODUCT NAME Common 60 Receptacle Body CUSTOMER COPY	3	12/12/2024	C.Taylor	Added FLP Gap 0.4
ALL SURFACES TO UNLESS OTHERWISE NOTED			SIZE A3			REVISION NUMBER	REVISION DATE	REVISION BY	REVISION DESCRIPTION

Ex

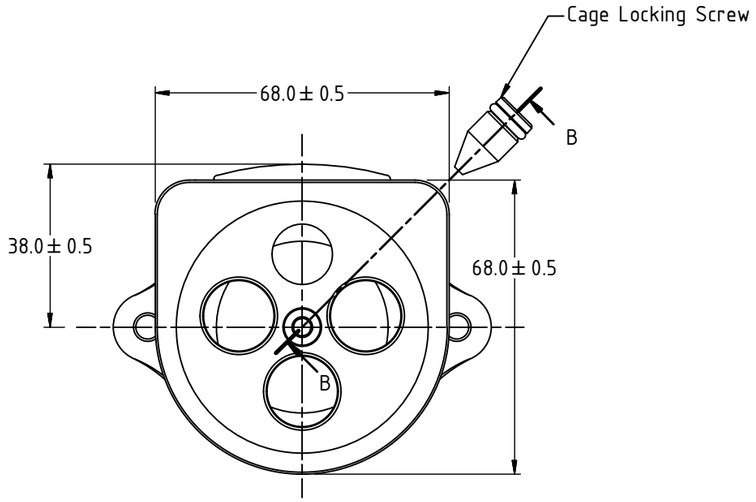

FRONT VIEW

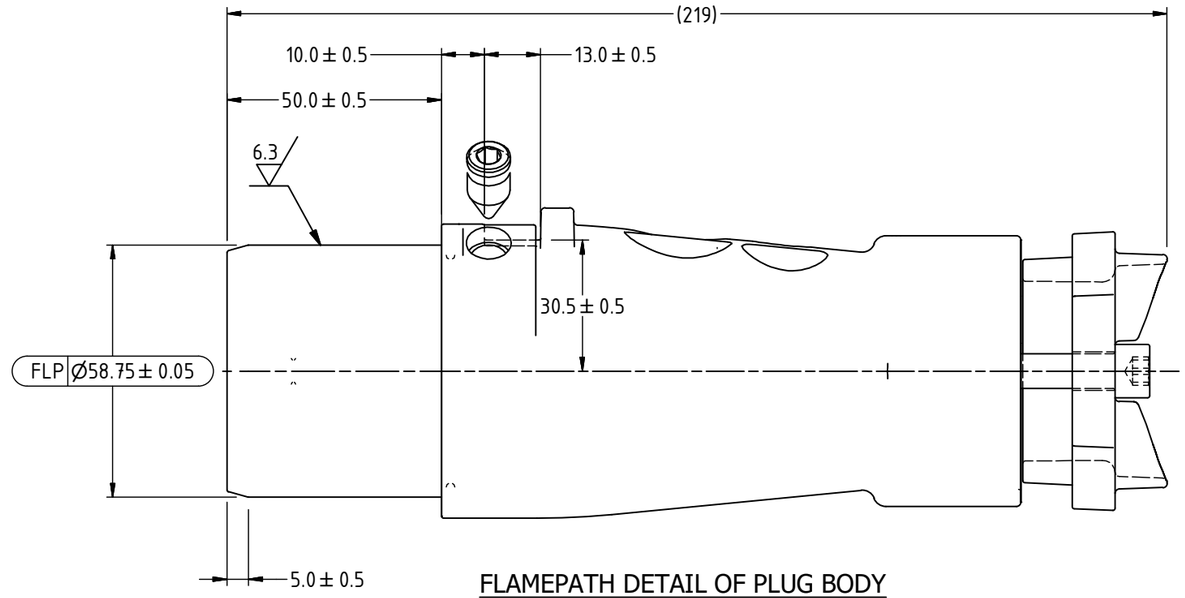

FLAMEPATH DETAIL OF PLUG BODY

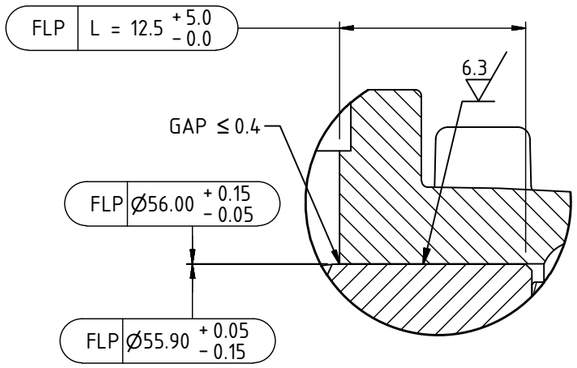

FLP PATH DETAIL

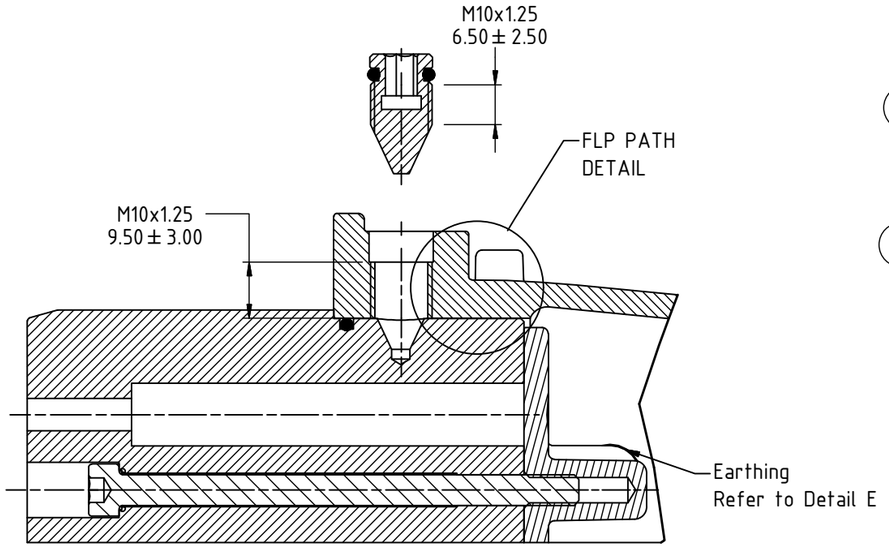

CAGE LOCKING SCREW
SECTION B-B

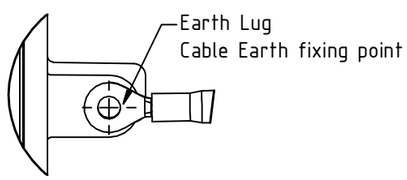

DETAIL E

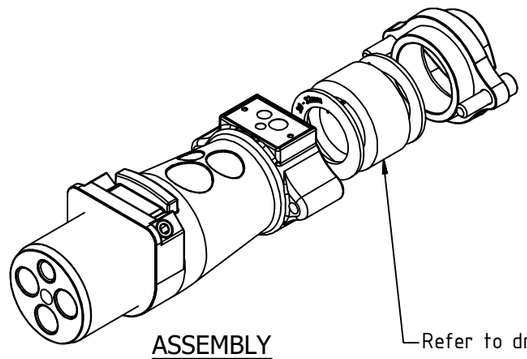

ASSEMBLY

This drawing forms part of the documentation for
Certification: ANZEx 16.2005X Issue: 7
Alterations not authorised by Simtars may invalidate this certification.

Ex

AUSPROOF PTY LTD								
© COPYRIGHT RESERVED			DRAWN BY G.Coumessos					
DIMENSIONS (Metric-millimetre-mm) UNLESS OTHERWISE SPECIFIED	X.X 0.1 X.XX 0.05		APPROVED BY C.Taylor	DRAWING NUMBER ExRPR60-C1101	PRODUCT NAME Common 60 Plug Body CUSTOMER COPY	3	12/12/2024	D.Jensen	Refer to drawings for Gland details: ExRPR60-C1303
ALL SURFACES TO UNLESS OTHERWISE NOTED			SIZE A3			REVISION NUMBER	REVISION DATE	REVISION BY	REVISION DESCRIPTION

Ex

Ex

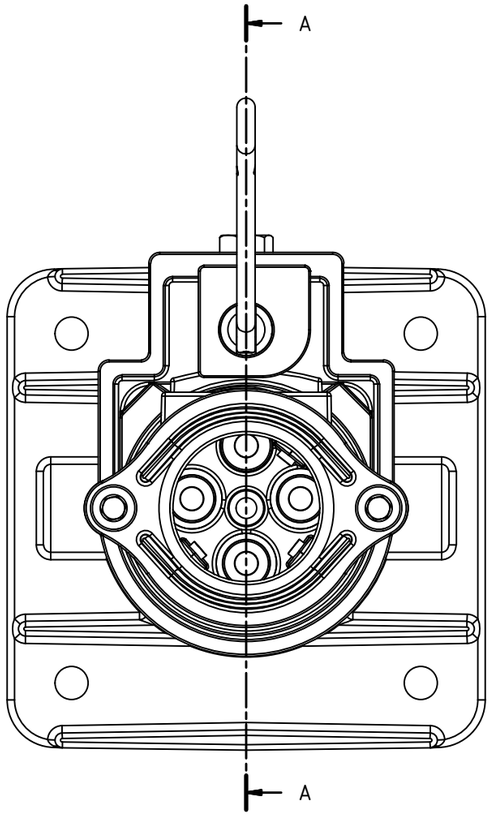

PLUG RECEPTACLE COUPLING
END VIEW

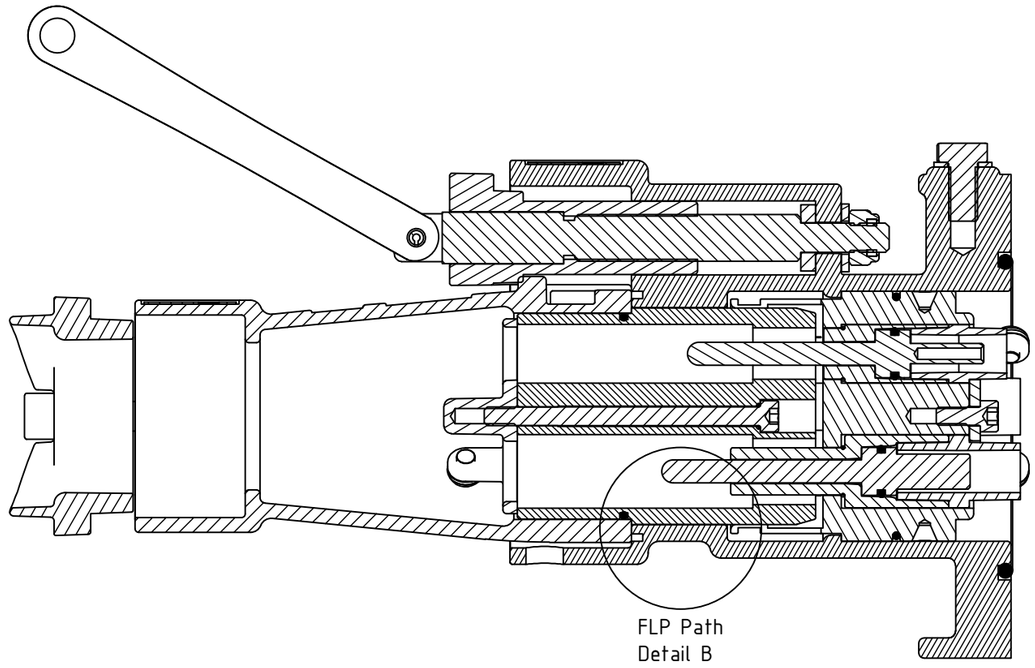

SECTION A-A

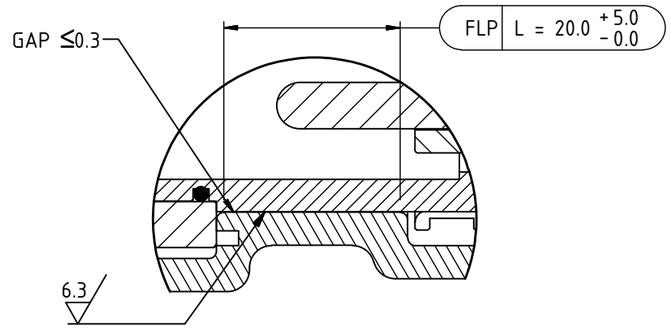

DETAIL B

This drawing forms part of the documentation for
Certification: ANZEx 16.2005X Issue: 7
Alterations not authorised by Simtars may invalidate this certification.

AUSPROOF PTY LTD								
© COPYRIGHT RESERVED			DRAWN BY G.Coumessos					
DIMENSIONS (Metric-millimetre-mm) UNLESS OTHERWISE SPECIFIED	X.X 0.1 X.XX 0.05		APPROVED BY C.Taylor	DRAWING NUMBER ExRPR60-C1102	PRODUCT NAME 60 PLUG & REC'L ENGAGED CUSTOMER COPY	2	07/10/2020	D.Jensen	Updated to IECEx Standards
ALL SURFACES TO UNLESS OTHERWISE NOTED			SIZE A3			REVISION NUMBER	REVISION DATE	REVISION BY	REVISION DESCRIPTION

Ex

Ex

RECEPTACLE CONTACT/INSULATOR/CAGE ASSEMBLY
FLAME PROOF PATHS

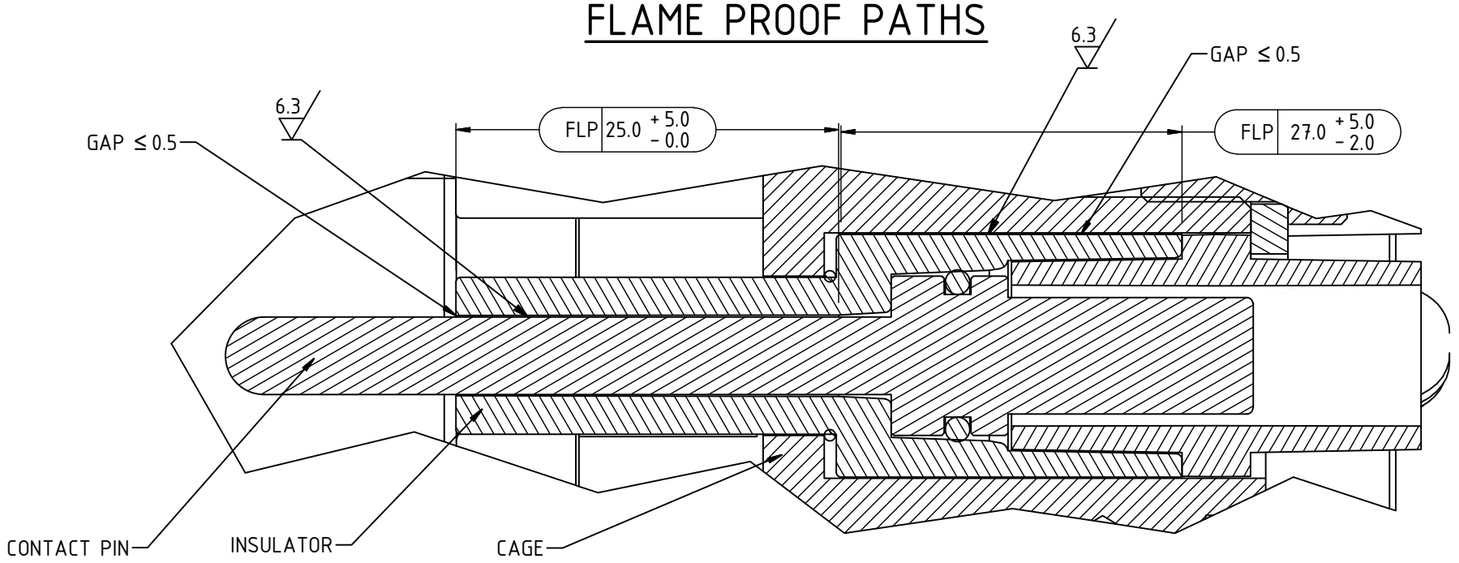

PHASE PIN ASSEMBLY	
Product Name	Rating
R164	1100V/60A
R664	660V/60A

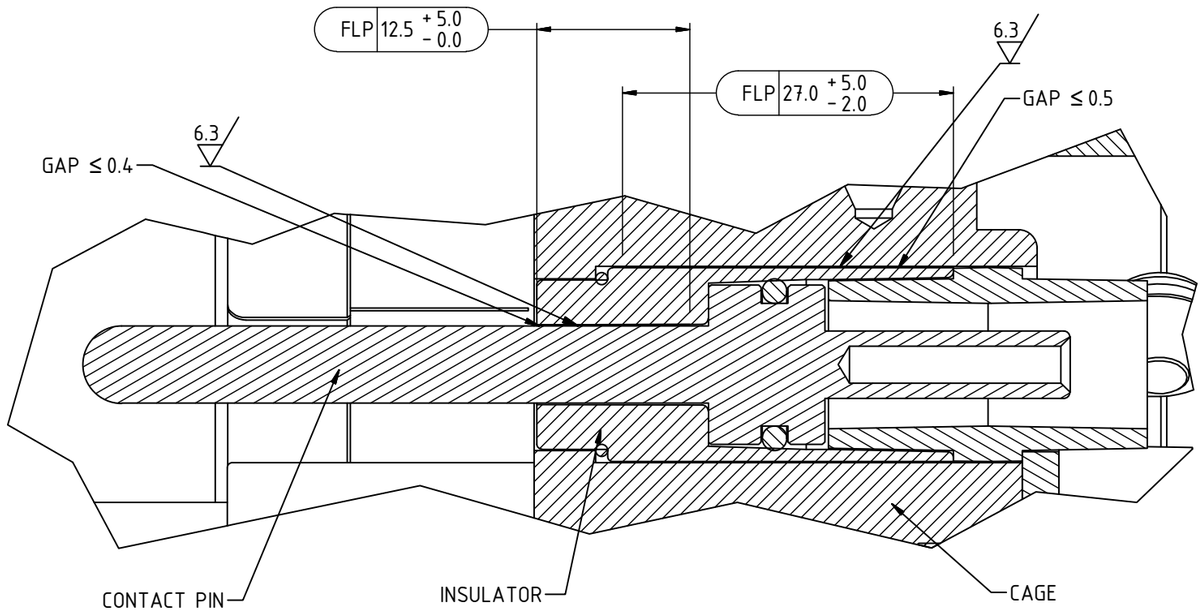

PILOT PIN ASSEMBLY	
Product Name	Rating
R164	1100V/60A
R664	660V/60A

This drawing forms part of the documentation for Certification: ANZEx 16.2005X Issue: 7
Alterations not authorised by Simtars may invalidate this certification.

AUSPROOF PTY LTD

© COPYRIGHT RESERVED

DIMENSIONS (Metric-millimetre-mm) UNLESS OTHERWISE SPECIFIED ALL SURFACES TO UNLESS OTHERWISE NOTED	X.X 0.1 X.XX 0.05		DRAWN BY G.Coumessos APPROVED BY C.Taylor SIZE A3	DRAWING NUMBER ExRPR60-C1103	PRODUCT NAME 60 FLAME PATH SPECIFICATIONS CUSTOMER COPY	2 REVISION NUMBER	07/10/2020 REVISION DATE	D.Jensen REVISION BY	Updated to IECEx Standards REVISION DESCRIPTION

Ex

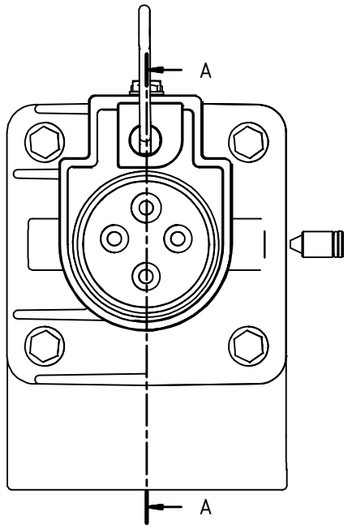

FRONT VIEW

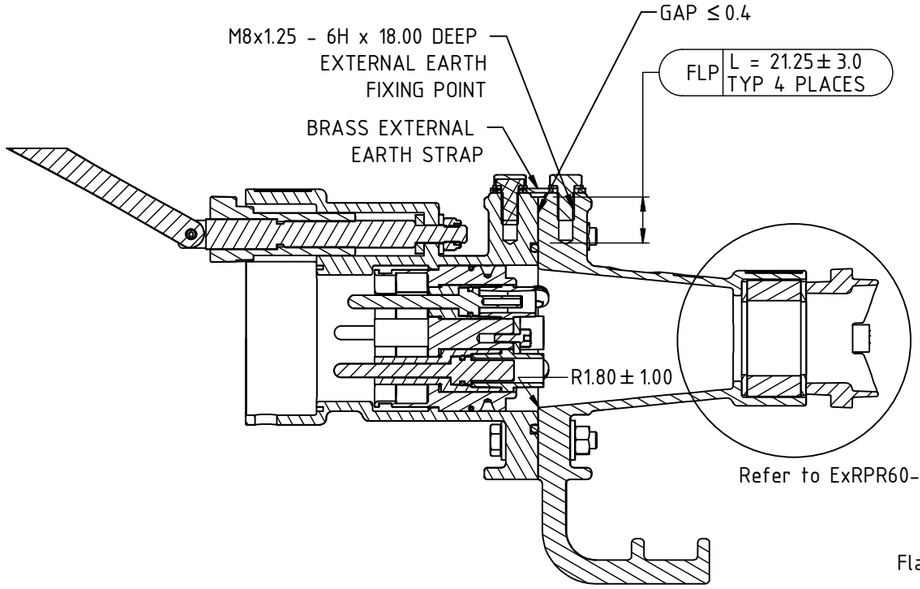

RECEPTACLE/GLAND ASSEMBLY
FLAMEPROOF PATH
SECTION A-A

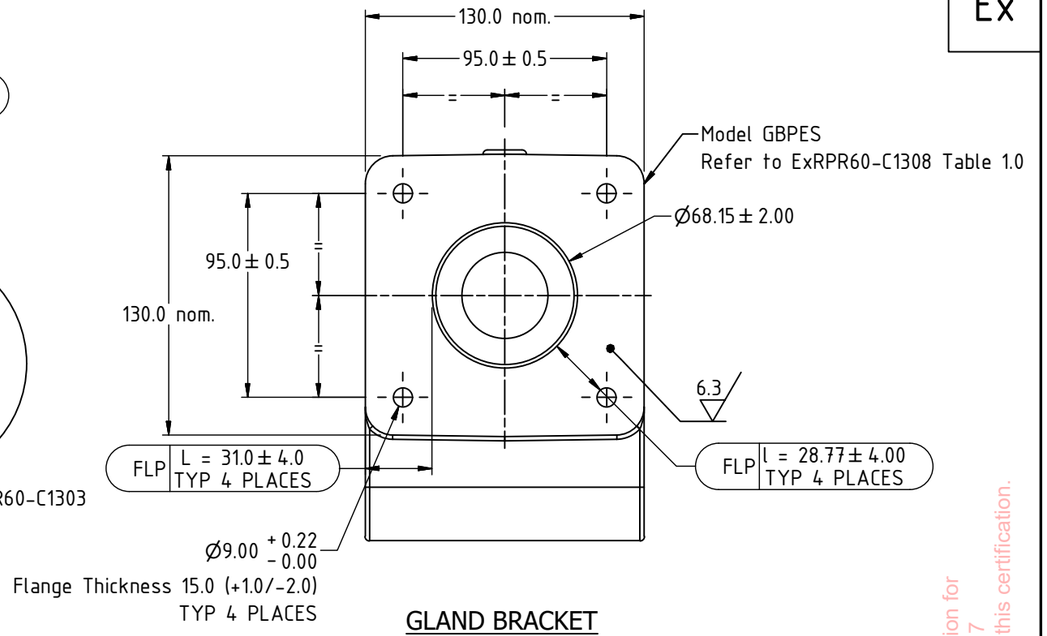

GLAND BRACKET
REAR FLANGE
NO O-RING
FLAME PROOF DETAILS

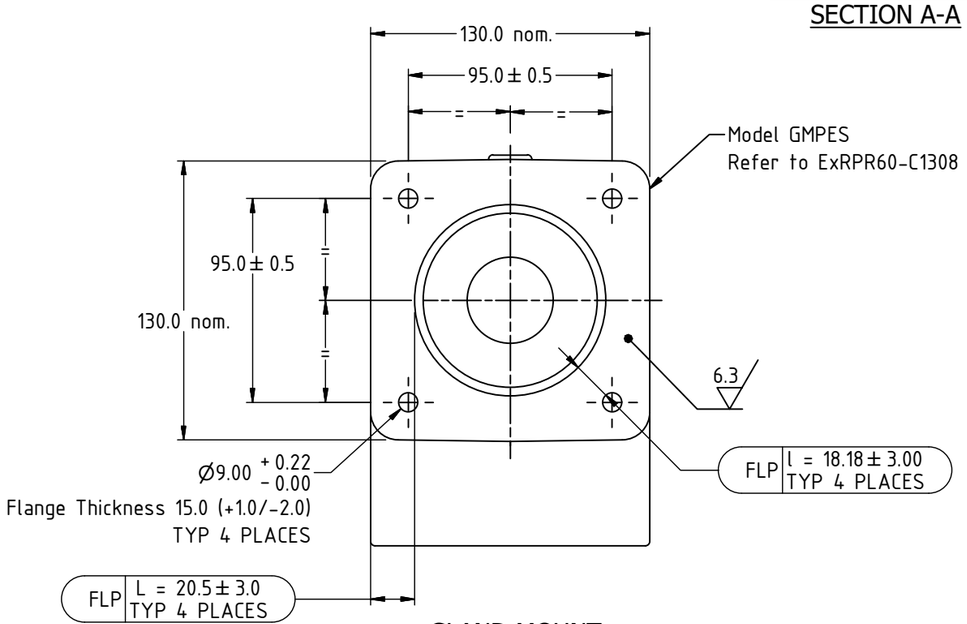

GLAND MOUNT
REAR FLANGE WITH O-RING
FOR OPTIONAL MOUNTING
FLAME PROOF DETAILS

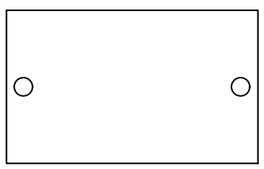

GLAND BRACKET / GLAND MOUNT
PRODUCT DATA LABEL
Refer to ExRPR60-C1308 Table 1.0

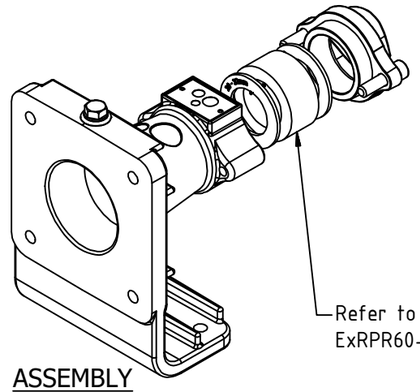

ASSEMBLY

Ex

This drawing forms part of the documentation for Certification: ANZEx 16.2005X Issue: 7
Alterations not authorised by Simtars may invalidate this certification.

AUSPROOF PTY LTD								
© COPYRIGHT RESERVED			DRAWN BY G.Coumessos					
DIMENSIONS (Metric-millimetre-mm) UNLESS OTHERWISE SPECIFIED	X.X 0.1		APPROVED BY C.Taylor	DRAWING NUMBER	PRODUCT NAME	3	12/12/2024	D.Jensen	Refer to drawings for Gland details: ExRPR60-C1303
ALL SURFACES TO UNLESS OTHERWISE NOTED	X.XX 0.05		SIZE A3	ExRPR60-C1104	Common 60 Gland Bracket CUSTOMER COPY	REVISION NUMBER	REVISION DATE	REVISION BY	REVISION DESCRIPTION

Ex

Ex

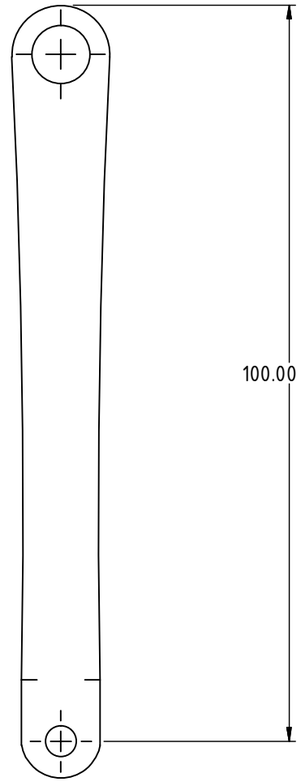

JACK IN HANDLE

This drawing forms part of the documentation for
Certification: ANZEx 16.2005X Issue: 7
Alterations not authorised by Simtars may invalidate this certification.

AUSPROOF PTY LTD

© COPYRIGHT RESERVED

DRAWN BY A.Castle								
DIMENSIONS (Metric-millimetre-mm) UNLESS OTHERWISE SPECIFIED	X.X 0.1 X.XX 0.05		APPROVED BY C.Taylor	DRAWING NUMBER	PRODUCT NAME	0	05/10/2022	A.Castle	Added Operating Mechanism
ALL SURFACES TO UNLESS OTHERWISE NOTED			SIZE A3	ExRPR60-C1105	Com 60 Operating Mech CUSTOMER COPY	REVISION NUMBER	REVISION DATE	REVISION BY	REVISION DESCRIPTION

Ex

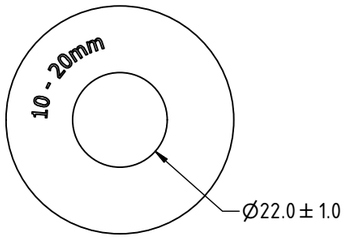

CABLE COMPRESSION WASHER

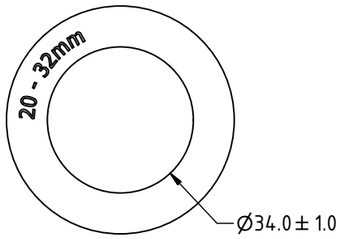

CABLE COMPRESSION WASHER

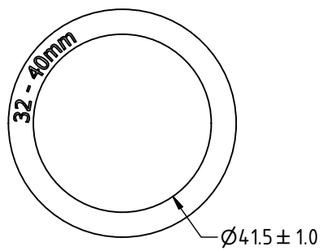

CABLE COMPRESSION WASHER

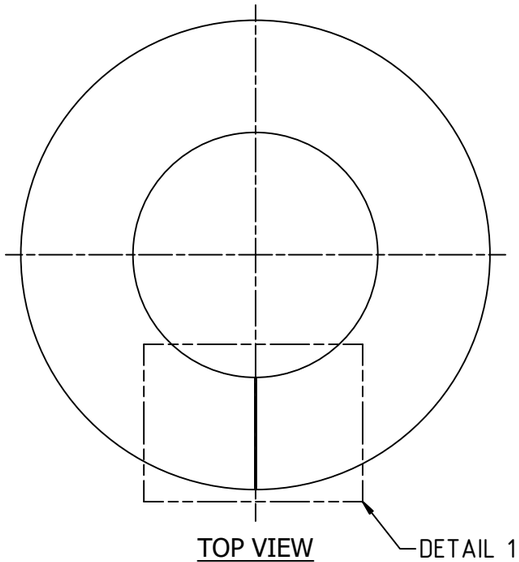

TOP VIEW
COMPRESSION GLAND RUBBER

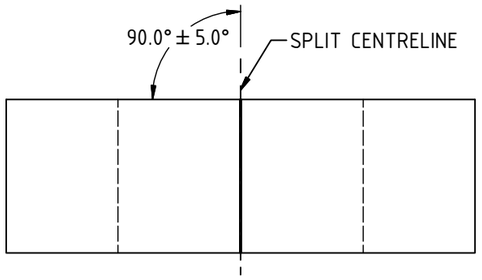

SIDE VIEW
COMPRESSION GLAND RUBBER

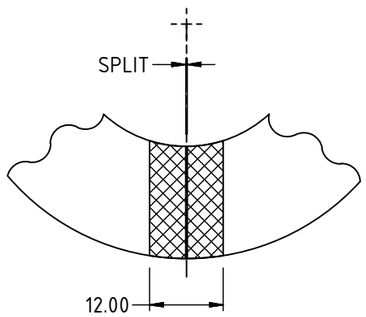

DETAIL 1

SPLIT IN RUBBER MUST BE CONTAINED
WITH IN THE HATCHED AREA
TYPICAL ALL COMPRESSION GLAND RUBBER SIZES

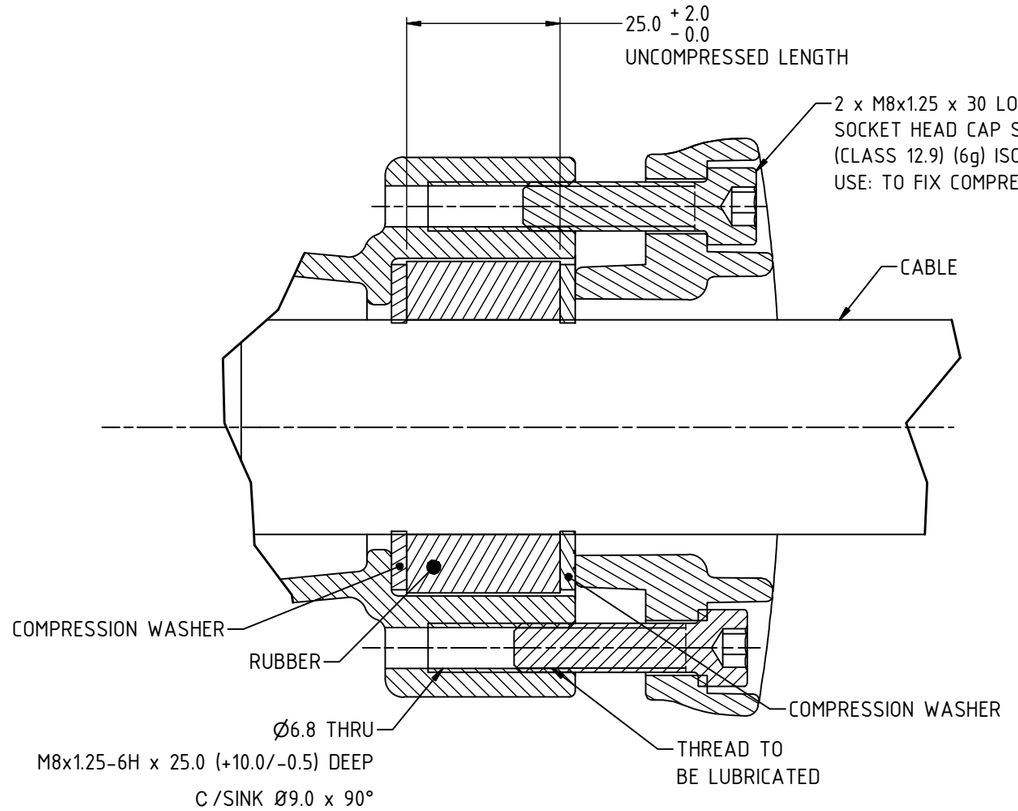

CABLE ENTRY DETAIL

Compression Gland Part Sizes			
Gland Rubber I.D. (± 1.0)	Washer I.D. (± 1.0)	To Suit Cable O.D.	Fastener Torque (Nm)
14	22	10 - 14	10
17	22	14 - 17	10
20	22	17 - 20	10
23	34	20 - 23	10
26	34	23 - 26	10
29	34	26 - 29	10
32	34	29 - 32	10
35	41.5	32 - 35	10
38	41.5	35 - 38	10
40	41.5	38 - 40	20

THREAD CLASS TO ISO 965
COARSE THREAD PITCH TO ISO 262

This drawing forms part of the documentation for Certification: ANZEx 16.2005X Issue: 7
Alterations not authorised by Simtars may invalidate this certification.

AUSPROOF PTY LTD

© COPYRIGHT RESERVED

DRAWN BY G.Coumessos								
DIMENSIONS (Metric-millimetre-mm) UNLESS OTHERWISE SPECIFIED	X.X 0.1 X.XX 0.05		APPROVED BY C.Taylor	DRAWING NUMBER	PRODUCT NAME	3	12/12/2024	D.Jensen	Added Compression Gland Table & Split Rubber Detail
ALL SURFACES TO UNLESS OTHERWISE NOTED			SIZE A3	ExRPR60-C1303	Common 60 Plug Cable Clamp Assembly CUSTOMER COPY	REVISION NUMBER	REVISION DATE	REVISION BY	REVISION DESCRIPTION

Ex

Ex

FASTENER SCHEDULE

3 x M5 x 6 Z/P BUTTON HEAD SOCKET CAP SCREWS (Class 12.9) (6g) ISO 7380
AND 3 x M5 S/S BELLEVILLE LOCK WASHER
USE: EARTH FIXING SCREWS FOR PLUG CAGE BACK

1 x M5 x 75 Z/P SOCKET HEAD CAP SCREWS (Class 12.9) (6g) ISO 4762
USE: TO FIX PLUG FRONT CAGE AND BACK CAGE TOGETHER

2 x M8 x 30 Z/P SOCKET HEAD CAP SCREWS (Class 12.9) (6g) ISO 4762
USE: TO FIX COMPRESSION CLAMP

1 x M8 x 1.25 Z/P NYLOC NUTS (Class 8) (6H) ISO 7040
AND 1 x M8 Z/P WASHER (Class 8) (200HV) ISO 7089
USE: TO FIX PAWL SCREW INTO SOCKET BODY

1 x M5 x 12 Z/P SOCKET HEAD CAP SCREW (Class 12.9) (6g) ISO 4762
USE: TO FIX SOCKET STAR RETAINING PLATE

3 x M5 x 6 Z/P BUTTON HEAD SOCKET CAP SCREWS (Class 12.9) (6g) ISO 7380
AND 3 x M5 S/S BELLEVILLE LOCK WASHERS
USE: EARTH FIXING SCREWS FOR SOCKET CAGE

4 x 4 GAUGE x 1/4" Z/P HAMMER DRIVE
USE: FIXING LABEL TO RECEPTACLE AND PLUG

1 x M8 x 16 Z/P SET SCREW (Class 8.8) (6g) ISO 4017
AND 1 x M8 S/S BELLEVILLE LOCK WASHER
USE: EARTH FIXING SCREW ON MAIN FLANGE

4 x M8 x 45 (MIN LENGTH) Z/P SET SCREWS (Class 4.6) (6g) ISO 4017
WITH 4 x M8 x 1.25 Z/P NUTS (Class 8) (6H) ISO 4032
AND 8 x M8 Z/P WASHERS (Class 8) (200HV) ISO 7089
OPTIONAL M8 x 1.25 HARDWARE MAY BE USED MUST HAVE A MINIMUM YIELD STRESS OF 240MPa
USE: TO FIX GLAND BRACKET TO RECEPTACLE

FIXING RECEPTACLE TO Ex d ENCLOSURE: PROPERTY CLASS ≥ 4.6*
*NOTE: SPECIFIED FASTENER PROPERTY CLASS TO BE ≥ THE FASTENER PROPERTY CLASS SPECIFIED FOR THE Ex ENCLOSURE.

THREAD CLASS TO ISO 965
COARSE THREAD PITCH TO ISO 262

This drawing forms part of the documentation for
Certification: ANZEx 16.2005X Issue: 7
Alterations not authorised by Simtars may invalidate this certification.

AUSPROOF PTY LTD

© COPYRIGHT RESERVED

DRAWN BY G.Coumessos								
DIMENSIONS (Metric-millimetre-mm) UNLESS OTHERWISE SPECIFIED	X.X 0.1 X.XX 0.05	APPROVED BY C.Taylor	DRAWING NUMBER	PRODUCT NAME	2	07/10/2020	D.Jensen	Updated to IECEx Standards
ALL SURFACES TO UNLESS OTHERWISE NOTED		SIZE A3	ExRPR60-C1307	Fastener Schedule CUSTOMER COPY	REVISION NUMBER	REVISION DATE	REVISION BY	REVISION DESCRIPTION

Ex

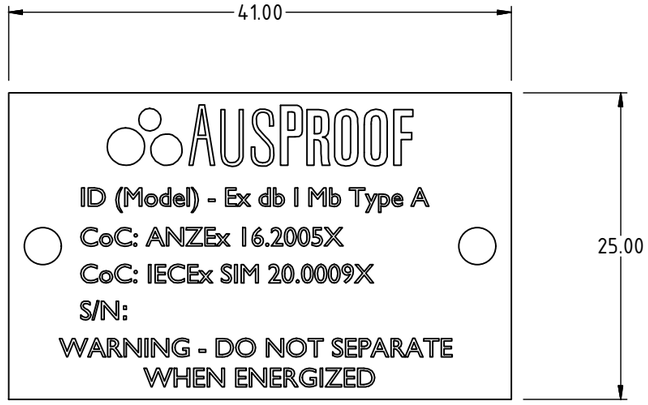

GLAND BRACKET / GLAND
MOUNT PRODUCT DATA LABEL
AS PER TABLE 1.0

Table 1.0	
Model	Volts Range
GBPES	660 - 1100
GMPES	660 - 1100

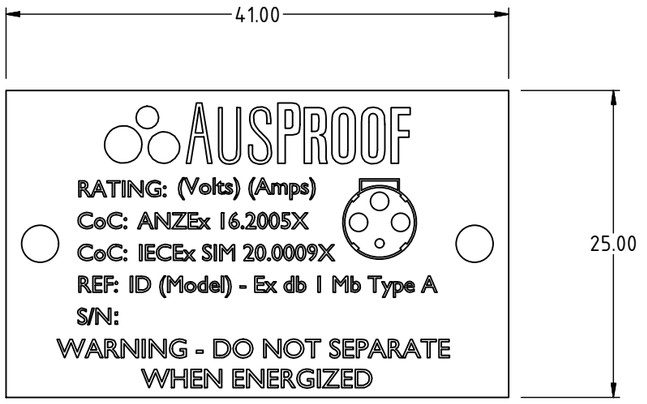

PLUG AND RECEPTACLE
PRODUCT DATA LABEL
AS PER TABLE 2.0

Table 2.0		
Model	Volts	Amps
P664	660V	60A
R664	660V	60A
P164	1100V	60A
R164	1100V	60A

Ex

This drawing forms part of the documentation for
Certification: ANZEx 16.2005X Issue: 7
Alterations not authorised by Simtars may invalidate this certification.

AUSPROOF PTY LTD

© COPYRIGHT RESERVED

DRAWN BY: C.Taylor
APPROVED BY: L.Richards
SIZE: A3
DRAWING NUMBER: ExRPR60-C1308
PRODUCT NAME: Product marking labels CUSTOMER COPY

DIMENSIONS (Metric-millimetre-mm) UNLESS OTHERWISE SPECIFIED
X.X 0.1
X.XX 0.05
ALL SURFACES TO UNLESS OTHERWISE NOTED

REVISION NUMBER	REVISION DATE	REVISION BY	REVISION DESCRIPTION
2	15/03/2022	D.Jensen	ADDED MISSING PLUG AND RECEPTACLE LABEL DETAILS

Ex

Ex

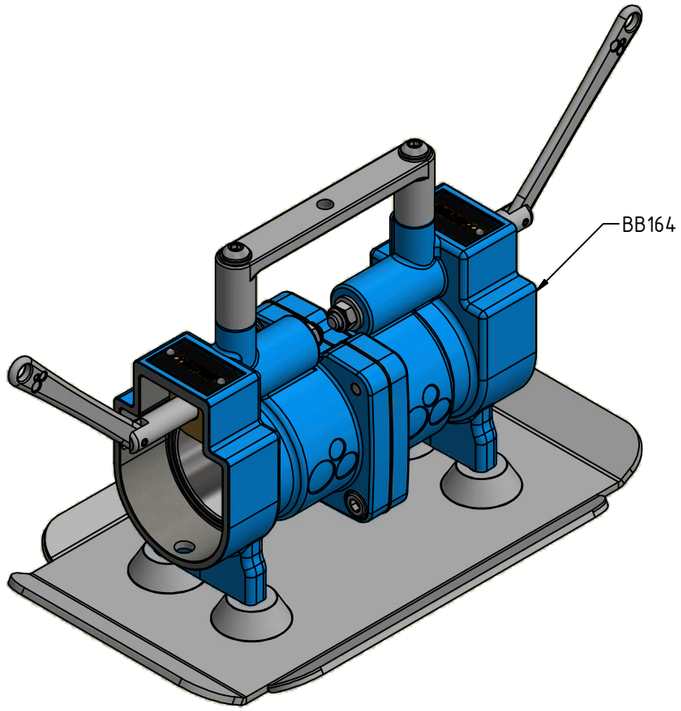

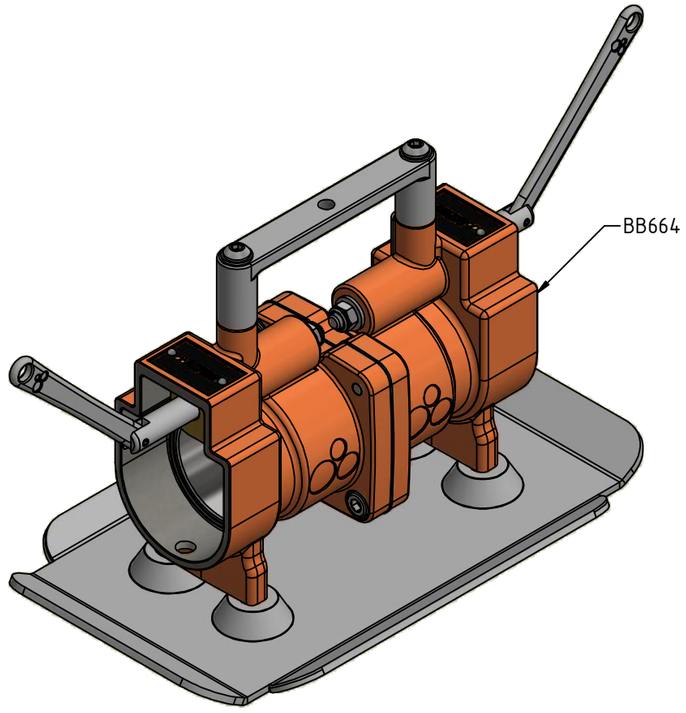

Product Name Format

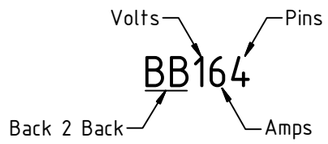

Note: Drawing numbers and their category
ExB2B60-C1000 - Concept Drawings
ExB2B60-C1100 - Flameproof
ExB2B60-C1200 - Product Range
ExB2B60-C1300 - General

This drawing forms part of the documentation for
Certification: ANZEx 16.2005X Issue: 7
Alterations not authorised by Simtars may invalidate this certification.

AUSPROOF PTY LTD

© COPYRIGHT RESERVED

DIMENSIONS (Metric-millimetre-mm) UNLESS OTHERWISE SPECIFIED ALL SURFACES TO UNLESS OTHERWISE NOTED	X.X 0.1 X.XX 0.05		DRAWN BY G.Coumessos APPROVED BY C.Taylor SIZE A3	DRAWING NUMBER ExB2B60-C1000	PRODUCT NAME 60 B2B Series Index CUSTOMER COPY	0 REVISION NUMBER	05/02/2019 REVISION DATE	D.Jensen REVISION BY	Updated to IECEx Standards REVISION DESCRIPTION

Ex

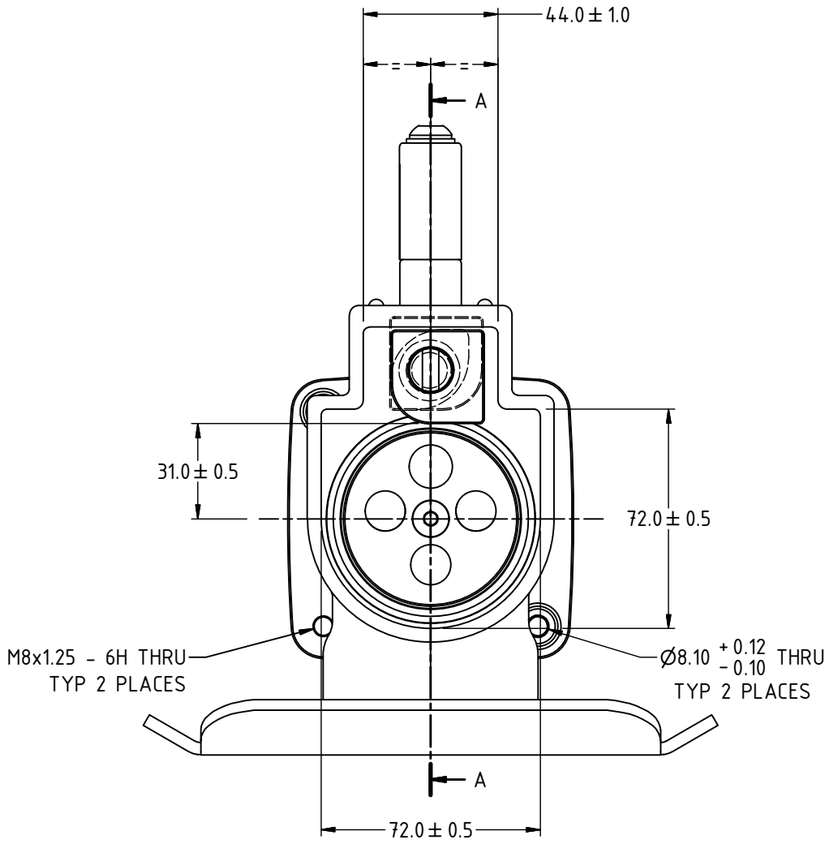

SIDE VIEW

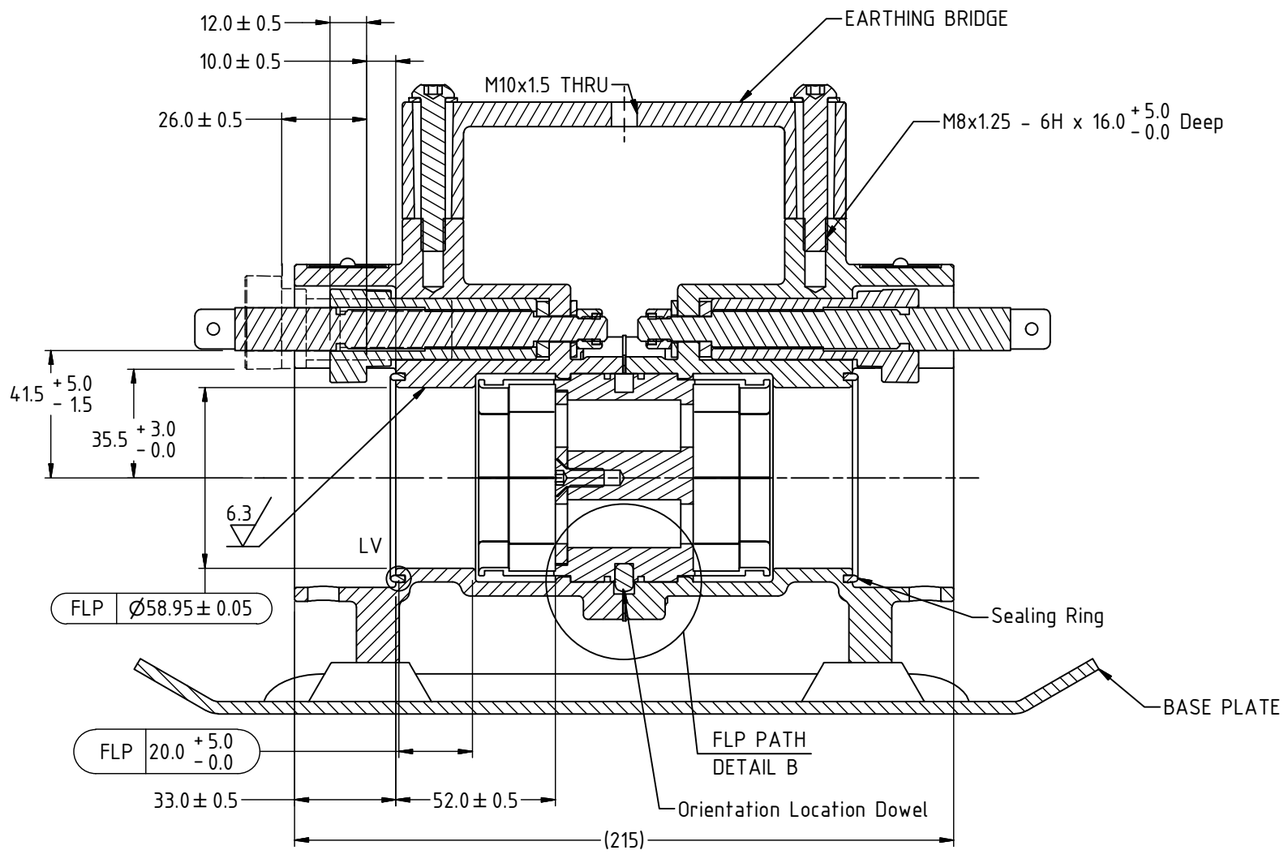

SECTION A-A

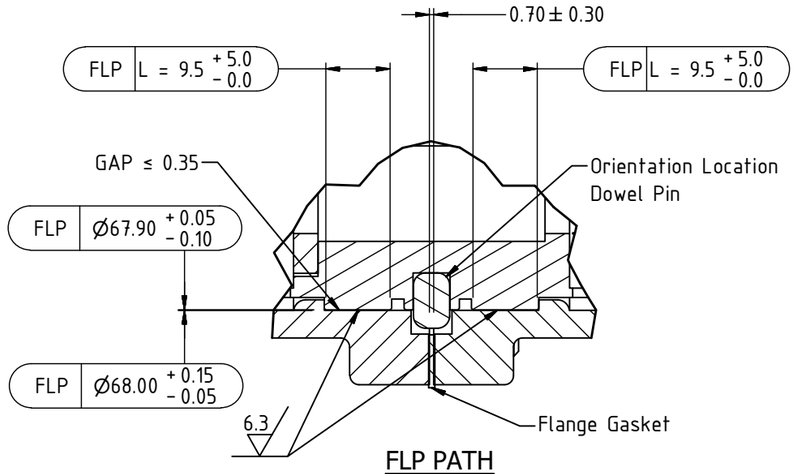

FLP PATH
DETAIL B

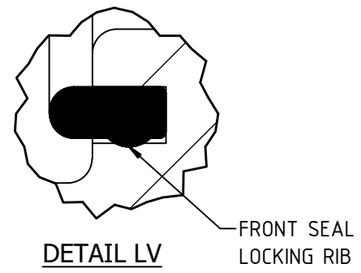

DETAIL LV

Ex

This drawing forms part of the documentation for
Certification: ANZEx 16.2005X Issue: 7
Alterations not authorised by Simtars may invalidate this certification.

AUSPROOF PTY LTD								
© COPYRIGHT RESERVED			DRAWN BY G.Coumessos					
DIMENSIONS (Metric-millimetre-mm) UNLESS OTHERWISE SPECIFIED	X.X 0.1 X.XX 0.05		APPROVED BY C.Taylor	DRAWING NUMBER ExB2B60-C1100	PRODUCT NAME Common B2B Receptacle Body CUSTOMER COPY	0	05/02/2019	D.Jensen	Updated to IECEx Standards
ALL SURFACES TO UNLESS OTHERWISE NOTED			SIZE A3			REVISION NUMBER	REVISION DATE	REVISION BY	REVISION DESCRIPTION

Ex

Ex

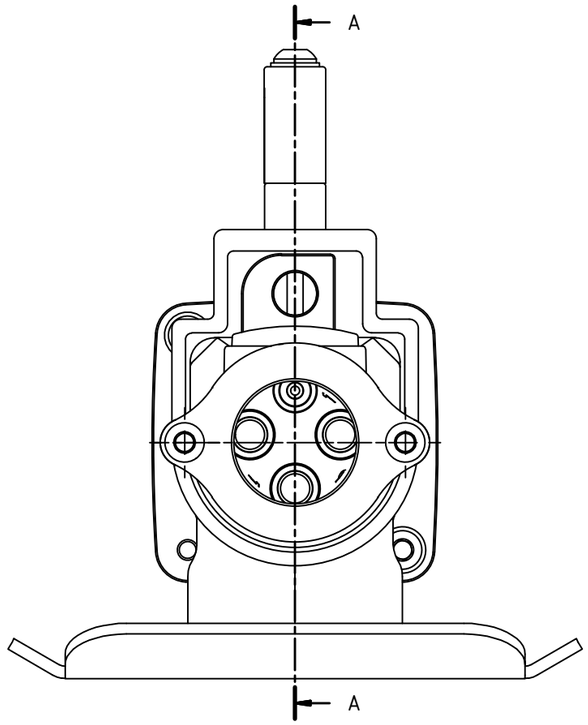

PLUG INSERTED INTO BACK TO BACK RECEPTACLE
END VIEW

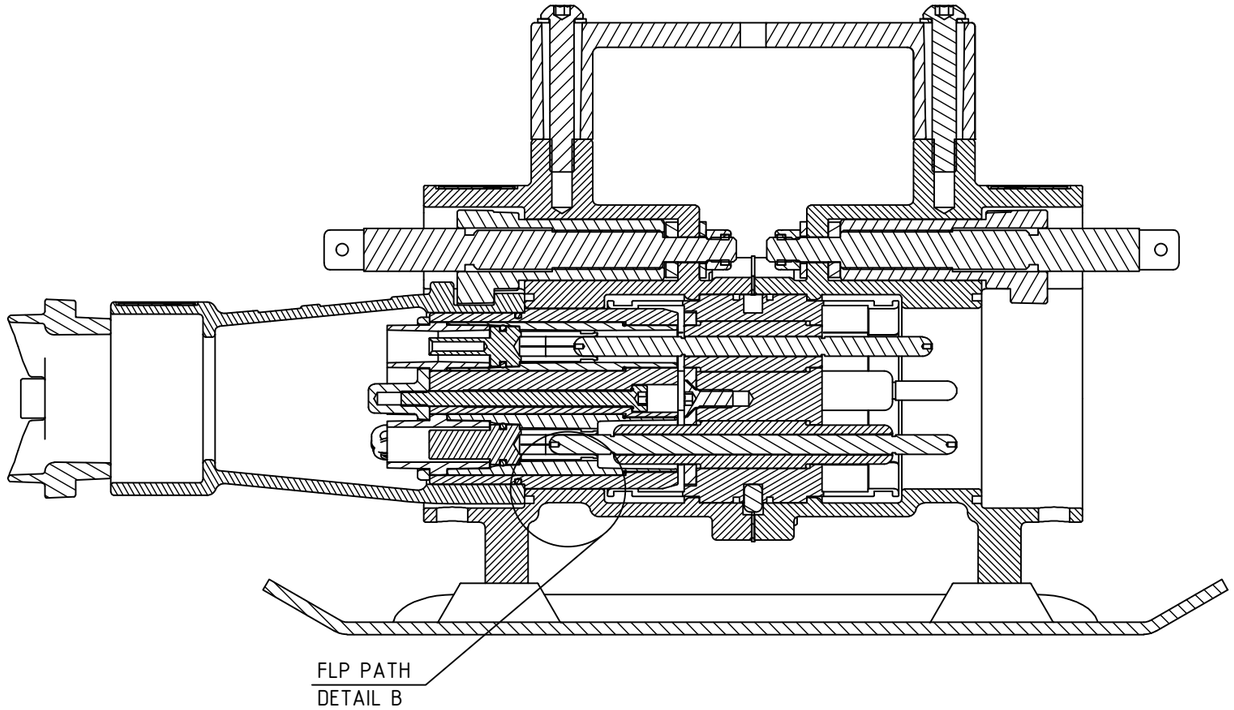

SECTION A-A

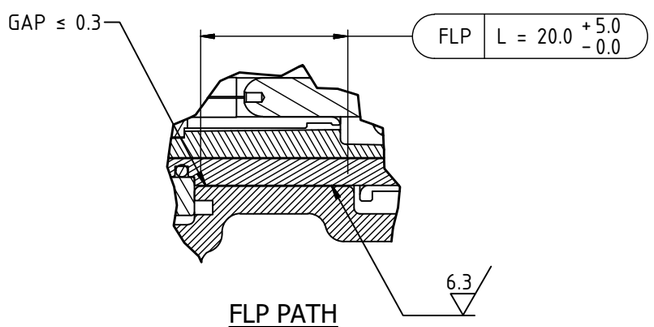

FLP PATH
DETAIL B

This drawing forms part of the documentation for
Certification: ANZEx 16.2005X Issue: 7
Alterations not authorised by Simtars may invalidate this certification.

AUSPROOF PTY LTD								
© COPYRIGHT RESERVED			DRAWN BY G.Coumessos					
DIMENSIONS (Metric-millimetre-mm) UNLESS OTHERWISE SPECIFIED	X.X 0.1		APPROVED BY C.Taylor	DRAWING NUMBER	PRODUCT NAME	0	05/02/2019	D.Jensen	Updated to IECEx Standards
ALL SURFACES TO UNLESS OTHERWISE NOTED	X.XX 0.05		SIZE A3	ExB2B60-C1101	Plug And B2B Body Engaged CUSTOMER COPY	REVISION NUMBER	REVISION DATE	REVISION BY	REVISION DESCRIPTION

Ex

Ex

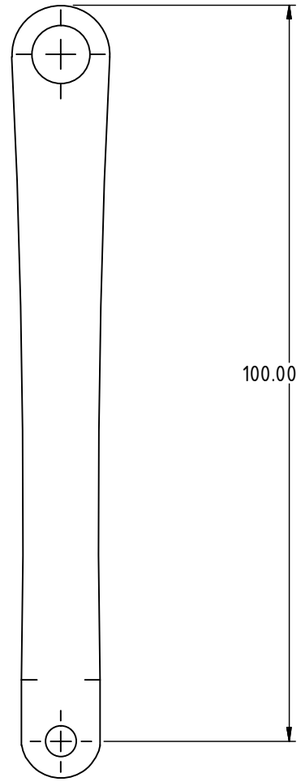

JACK IN HANDLE

This drawing forms part of the documentation for
Certification: ANZEx 16.2005X Issue: 7
Alterations not authorised by Simtars may invalidate this certification.

AUSPROOF PTY LTD

© COPYRIGHT RESERVED

DRAWN BY A.Castle								
DIMENSIONS (Metric-millimetre-mm) UNLESS OTHERWISE SPECIFIED	X.X 0.1 X.XX 0.05		APPROVED BY C.Taylor	DRAWING NUMBER ExB2B60-C1102	PRODUCT NAME Com 60 Operating Mech CUSTOMER COPY	0	06/10/2022	A.Castle	Added Operating Mechanism
ALL SURFACES TO UNLESS OTHERWISE NOTED			SIZE A3			REVISION NUMBER	REVISION DATE	REVISION BY	REVISION DESCRIPTION

Ex

Ex

FASTENER SCHEDULE

2 x M8x1.25 x 50 Z/P BUTTON HEAD SOCKET CAP SCREWS (CLASS 12.9) (6g) ISO 7380
AND 2 x M8 S/S BELLEVILLE LOCK WASHERS
USE: EARTH FIXING SCREWS FOR EARTH BRIDGE

2 x M8x1.25 Z/P NYLOC NUTS (CLASS 8) (6H) ISO 7040
AND 2 x M8 Z/P WASHER (CLASS 8) (200HV) ISO 7089
USE: TO FIX PAWL SCREW INTO B2B BODY

4 x 4GAUGE X 1/4" Z/P HAMMER DRIVE
USE: FIXING LABELS TO B2B BODY

4 x M8x1.25 x 20 Z/P SET SCREW (CLASS 4.6) (6g) ISO 4017
AND 4 x M8 B/S WASHER (CLASS 4) (200HV) ISO 7089
USE: FIX BASE PLATE ONTO B2B BODY

4 x M8x1.25 x 20 Z/P SOCKET HEAD CAP SCREWS (CLASS 12.9) (6g) ISO 4762
USE: TO FIX B2B BODIES TOGETHER

1 x M6x1.0 x 16 Z/P COUNTERSUNK SOCKET HEAD SCREW (CLASS 12.9) (6g) ISO 10642
USE: TO FIX RETAINING PLATE TO CAGE

1 x Ø5.9 x 9.0MM DOWEL PIN
USE: FOR CAGE LOCATION

THREAD CLASS TO ISO 965
COARSE THREAD PITCH TO ISO 262

This drawing forms part of the documentation for
Certification: ANZEx 16.2005X Issue: 7
Alterations not authorised by Simtars may invalidate this certification.

AUSPROOF PTY LTD

© COPYRIGHT RESERVED

DRAWN BY: G.Coumessos
APPROVED BY: C.Taylor
SIZE: A3

DIMENSIONS (Metric-millimetre-mm) UNLESS OTHERWISE SPECIFIED
X.X 0.1
X.XX 0.05
ALL SURFACES TO UNLESS OTHERWISE NOTED

DRAWING NUMBER: ExB2B60-C1305
PRODUCT NAME: FASTENER SCHEDULE CUSTOMER COPY

REVISION NUMBER	REVISION DATE	REVISION BY	REVISION DESCRIPTION
0	05/02/2019	D.Jensen	Updated to IECEx Standards

Ex

Ex

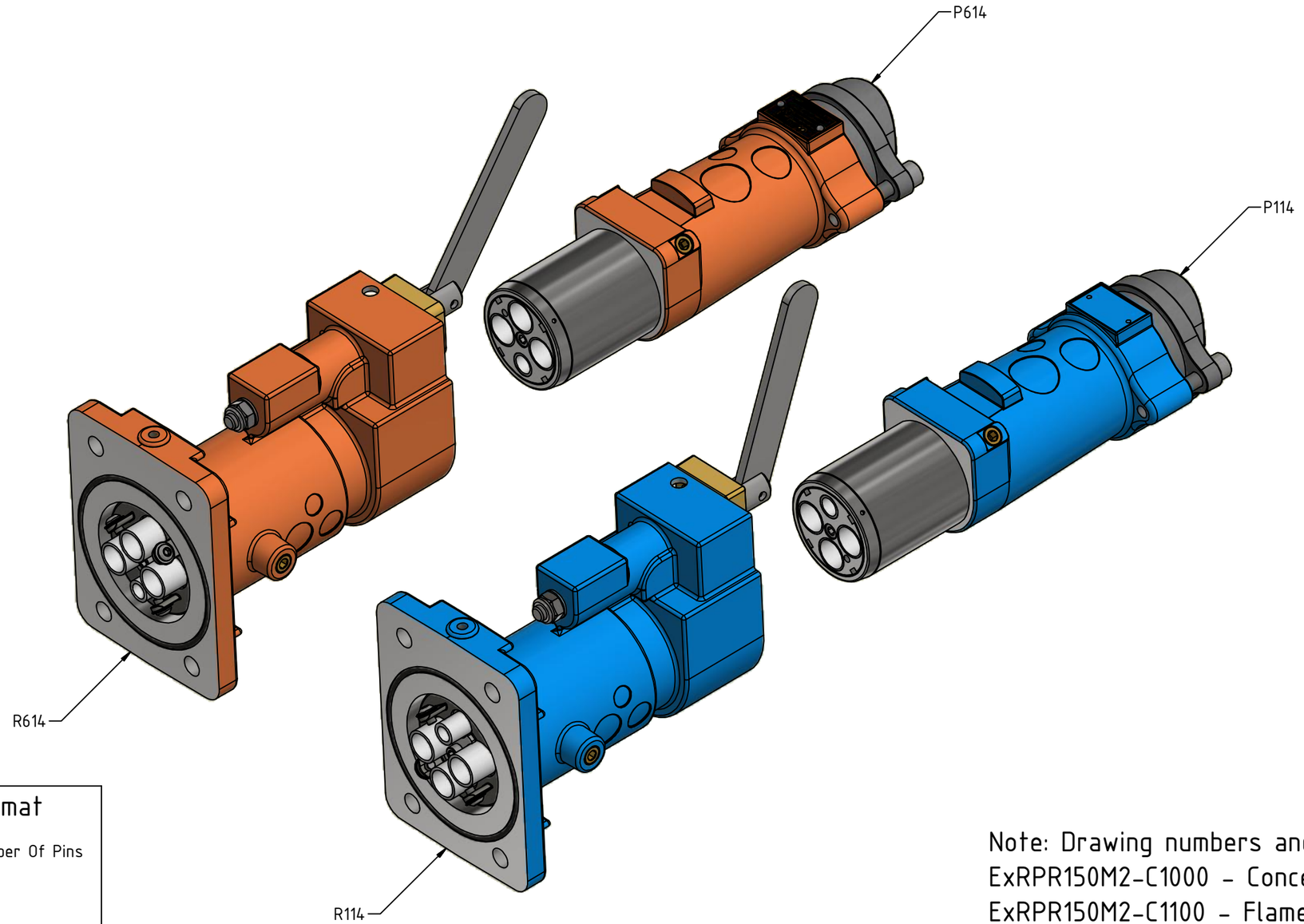

Product Name Format

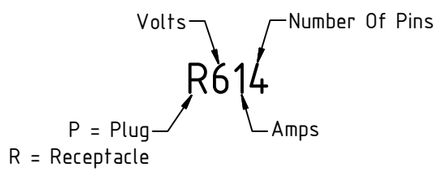

Note: Drawing numbers and their category
ExRPR150M2-C1000 - Concept Drawings
ExRPR150M2-C1100 - Flameproof
ExRPR150M2-C1200 - Product Range
ExRPR150M2-C1300 - General

This drawing forms part of the documentation for
Certification: ANZEx 16.2005X Issue: 7
Alterations not authorised by Simtars may invalidate this certification.

AUSPROOF PTY LTD

© COPYRIGHT RESERVED

DRAWN BY G.Coumessos								
DIMENSIONS (Metric-millimetre-mm) UNLESS OTHERWISE SPECIFIED	X.X 0.1 X.XX 0.05		APPROVED BY C.Taylor	DRAWING NUMBER	PRODUCT NAME	1	07/10/2020	D.Jensen	Updaed to IECEx Standards
ALL SURFACES TO UNLESS OTHERWISE NOTED			SIZE A3	ExRPR150M2-C1000	150 Series Index CUSTOMER COPY	REVISION NUMBER	REVISION DATE	REVISION BY	REVISION DESCRIPTION

Ex

Ex

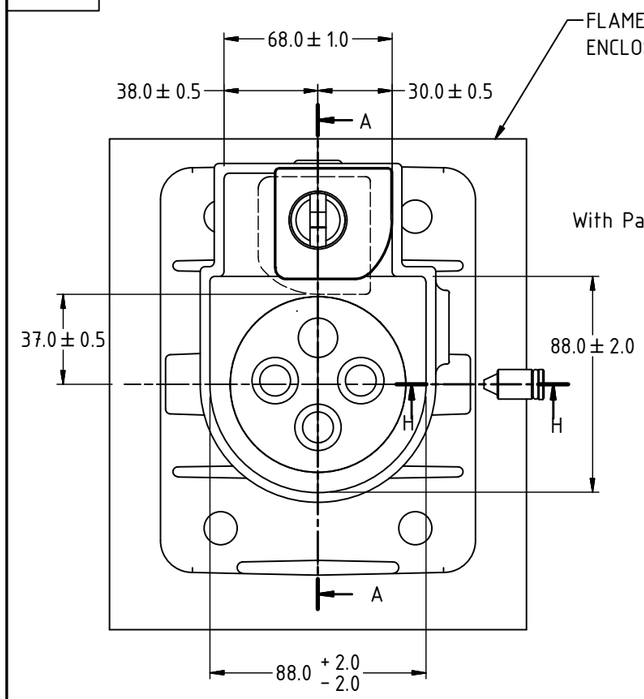

FRONT VIEW

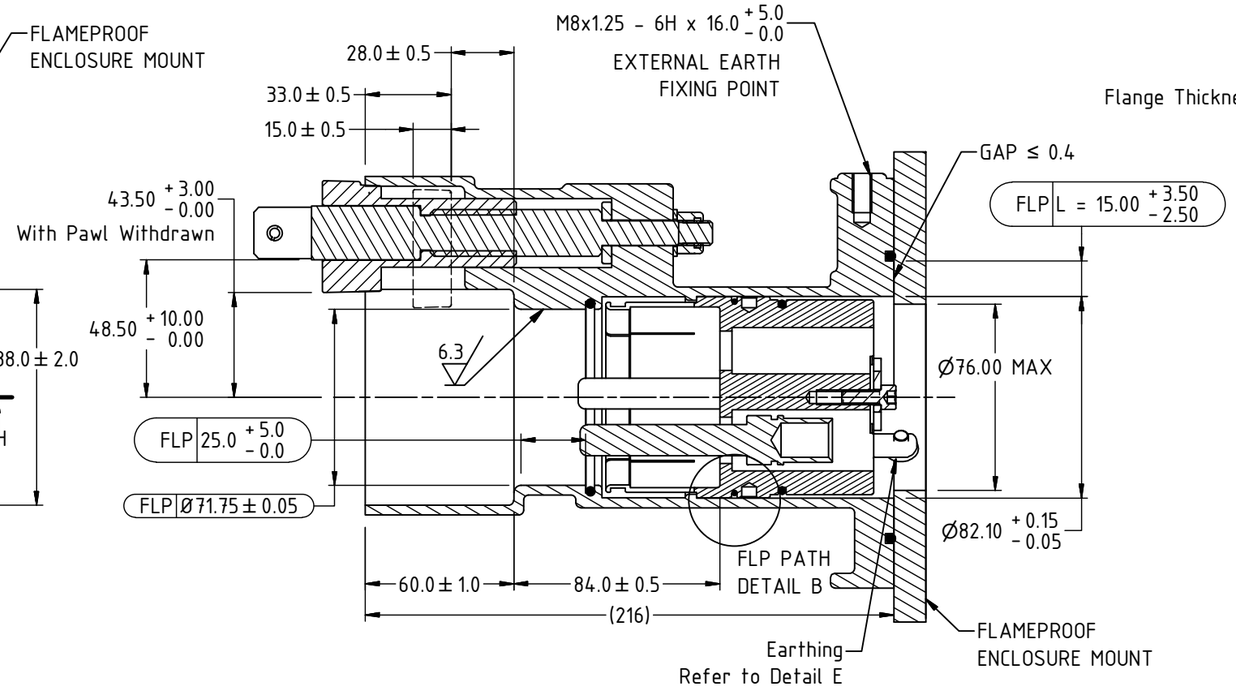

FLAMEPROOF PATH
SECTION A-A

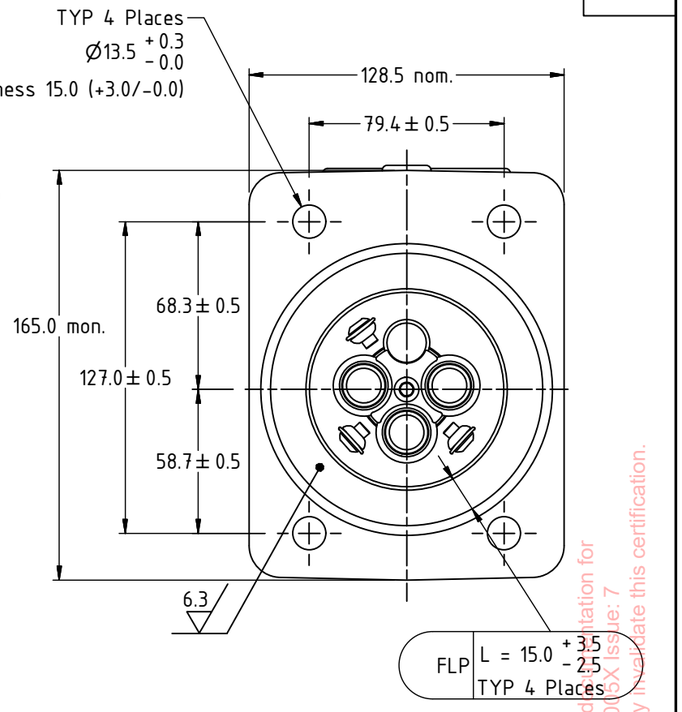

REAR FLANGE
FLAME PROOF DETAILS

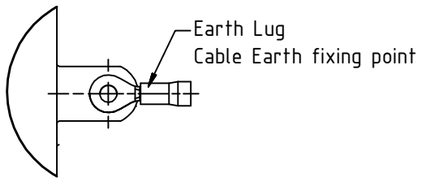

DETAIL E

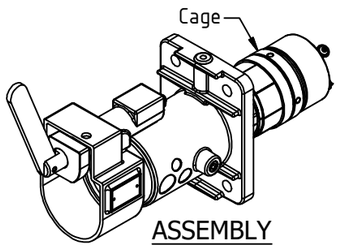

ASSEMBLY

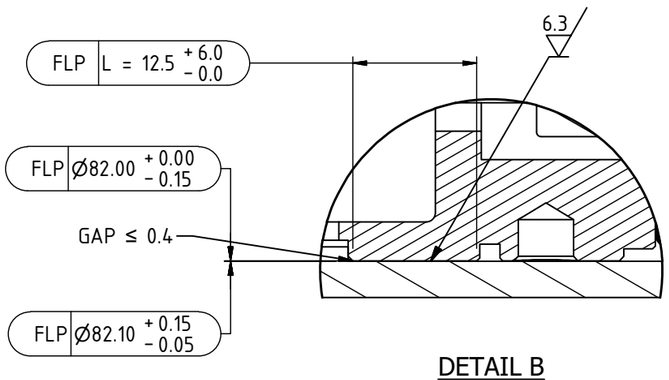

DETAIL B

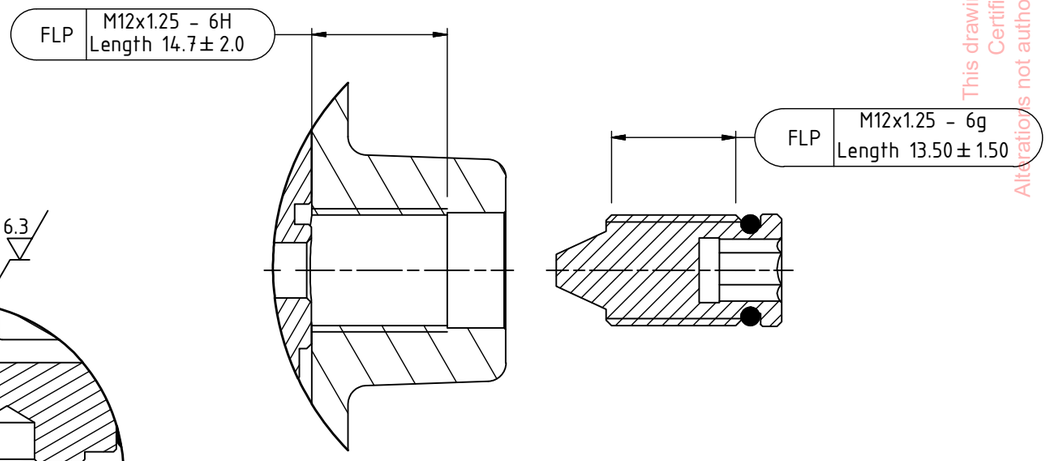

CAGE LOCKING SCREW
FLAMEPROOF SECTION H-H

This drawing forms part of the documentation for Certification: ANZEx 16.2065X Issue: 7
Alterations not authorised by Simtars may invalidate this certification.

AUSPROOF PTY LTD								
© COPYRIGHT RESERVED			DRAWN BY G.Coumessos					
DIMENSIONS (Metric-millimetre-mm) UNLESS OTHERWISE SPECIFIED	X.X 0.1 X.XX 0.05		APPROVED BY C.Taylor	DRAWING NUMBER ExRPR150M2-C1100	PRODUCT NAME Common 150 Receptacle Body CUSTOMER COPY	1	07/10/2020	D.Jensen	Updaed to IECEx Standards
ALL SURFACES TO UNLESS OTHERWISE NOTED			SIZE A3			REVISION NUMBER	REVISION DATE	REVISION BY	REVISION DESCRIPTION

Ex

Ex

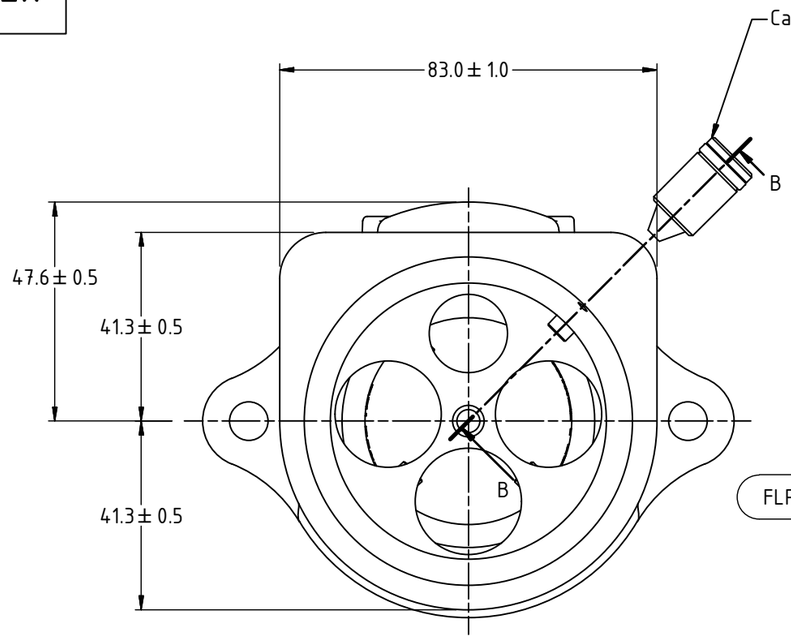

FRONT VIEW

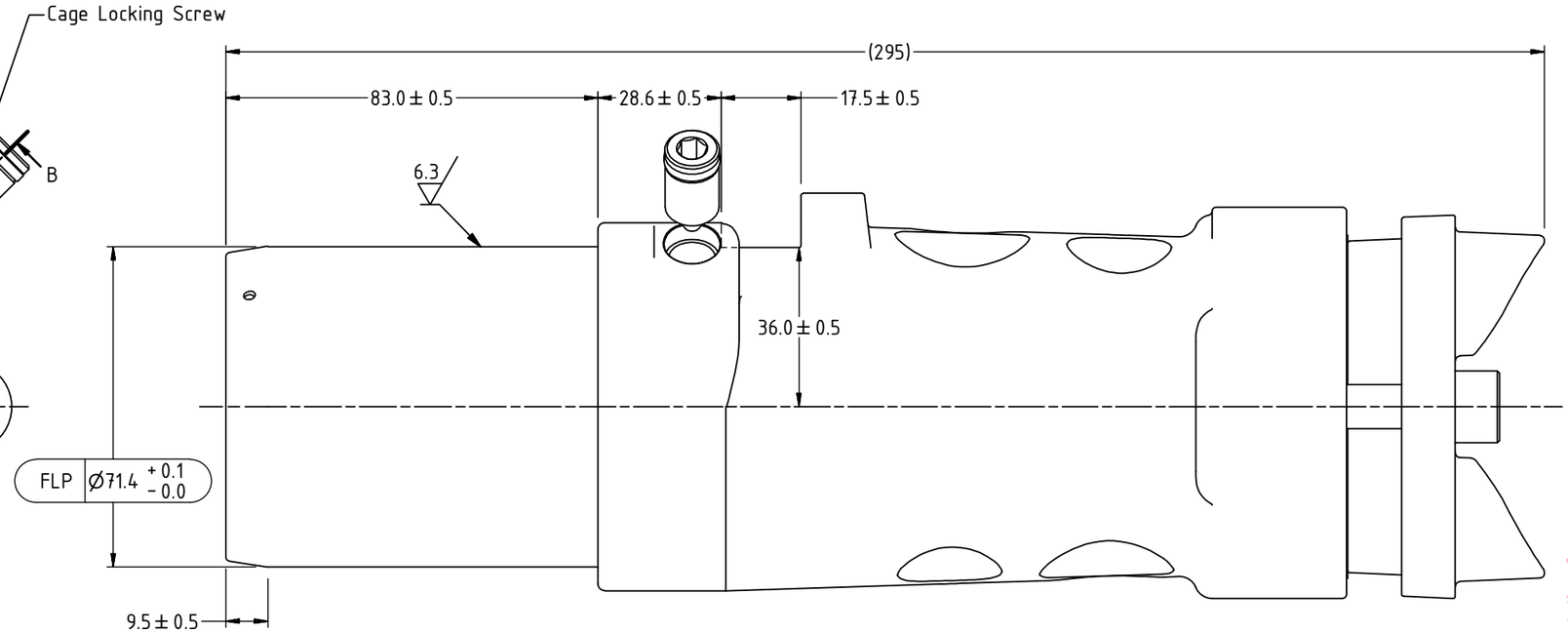

FLAMEPATH DETAIL OF PLUG BODY

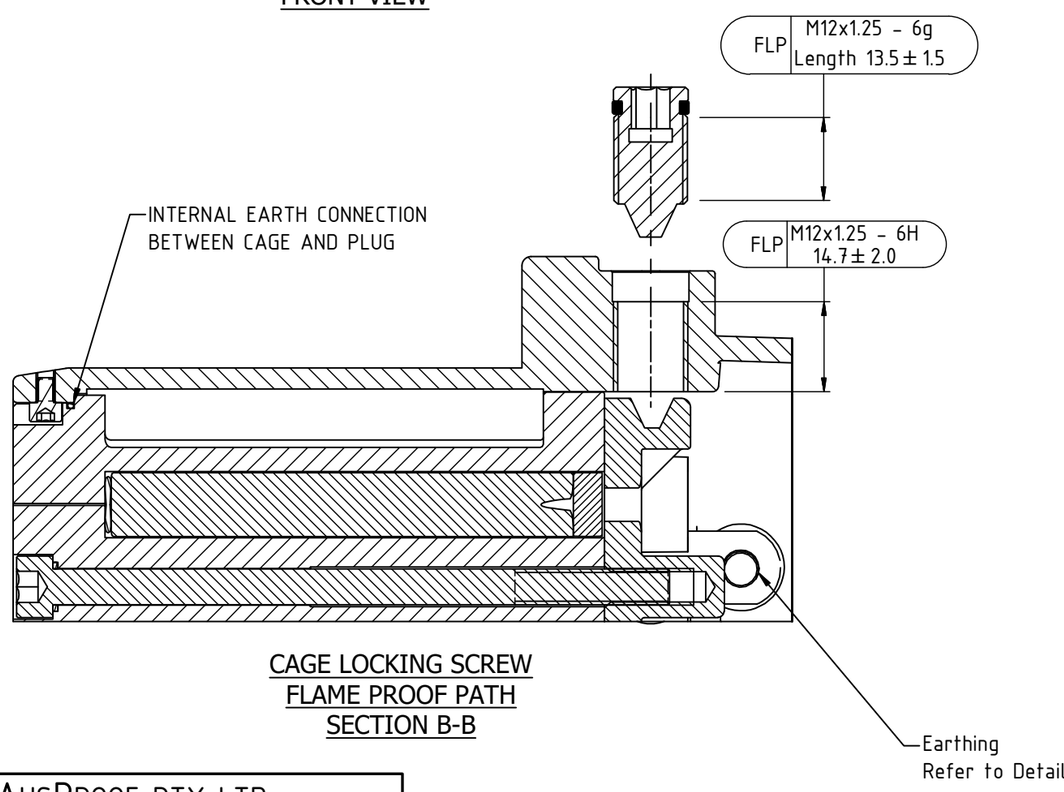

CAGE LOCKING SCREW
FLAME PROOF PATH
SECTION B-B

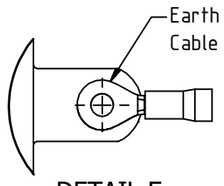

DETAIL E

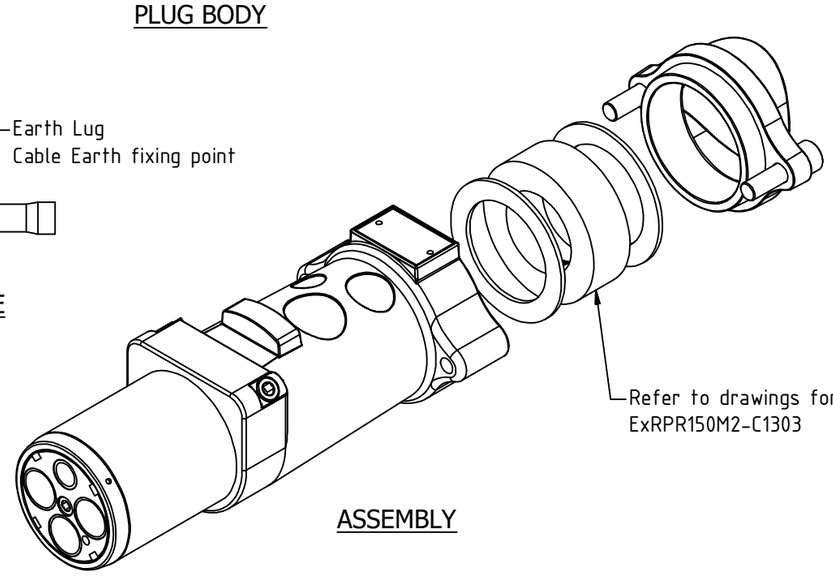

ASSEMBLY

This drawing forms part of the documentation for
Certification: ANZEx 16.2005X Issue: 7
Alterations not authorised by Simtars may invalidate this certification.

AUSPROOF PTY LTD

© COPYRIGHT RESERVED

DIMENSIONS (Metric-millimetre-mm) UNLESS OTHERWISE SPECIFIED	X.X 0.1 X.XX 0.05		DRAWN BY G.Coumessos	DRAWING NUMBER	PRODUCT NAME	3	08/01/2025	D.MINENKO	Refer to drawings for Gland details: ExRPR150M2-C1303
ALL SURFACES TO UNLESS OTHERWISE NOTED			APPROVED BY C.Taylor SIZE A3	ExRPR150M2-C1101	Common 150 Plug Body CUSTOMER COPY	REVISION NUMBER	REVISION DATE	REVISION BY	REVISION DESCRIPTION

Ex

Ex

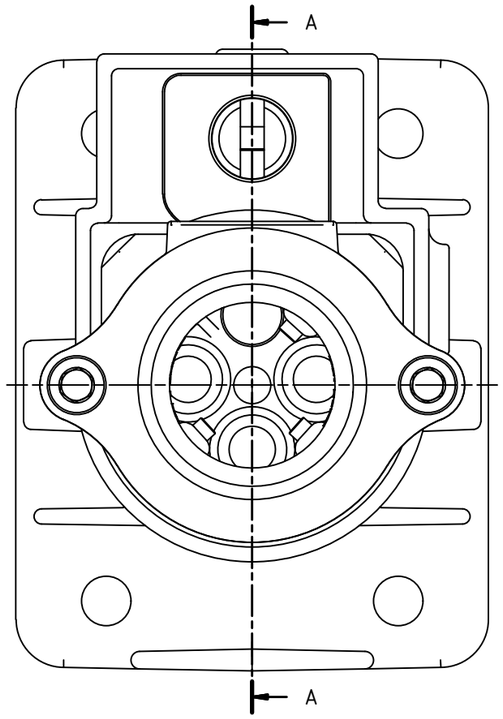

PLUG RECEPTACLE COUPLING
END VIEW

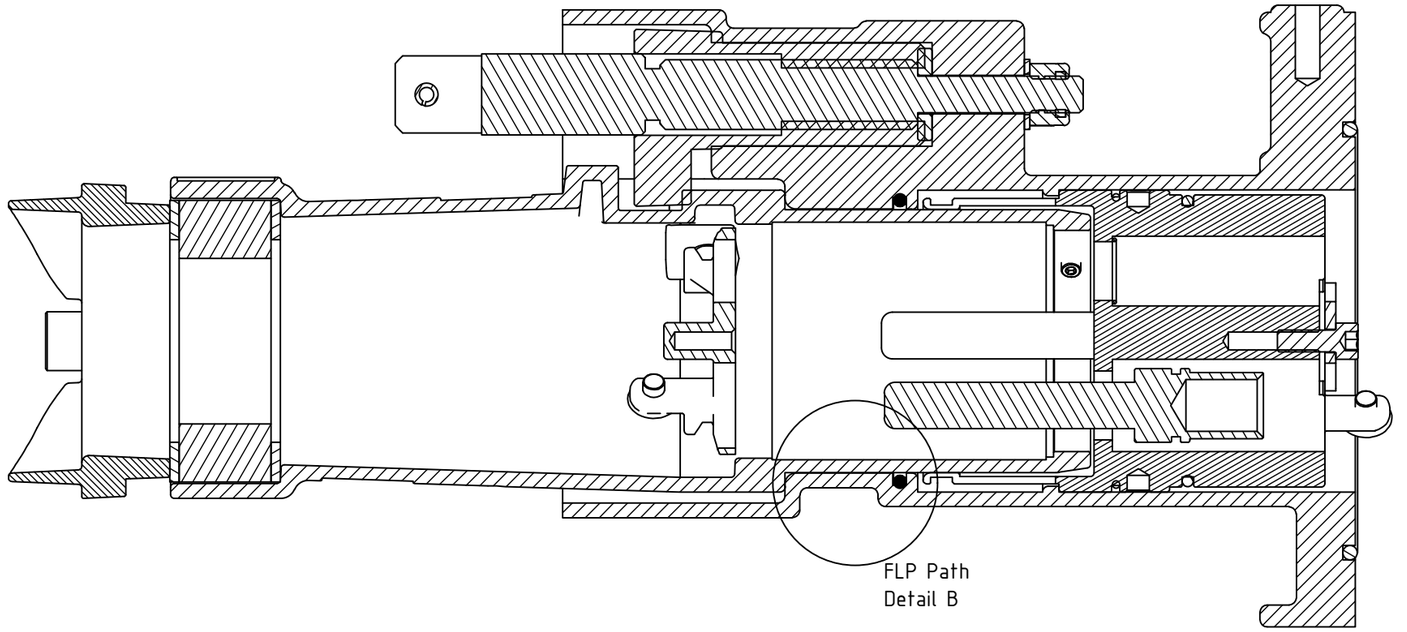

SECTION A-A

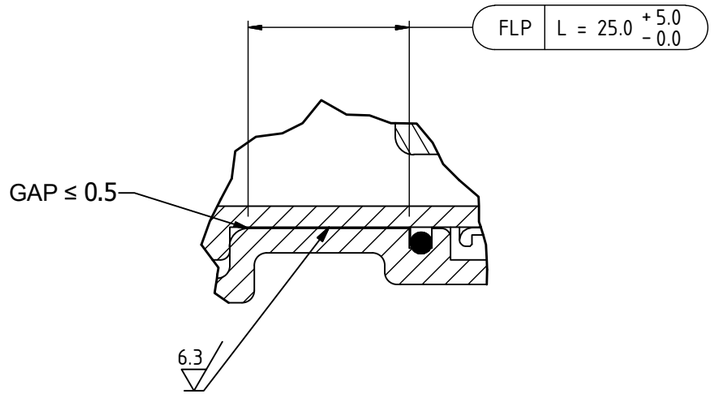

DETAIL B

This drawing forms part of the documentation for Certification: ANZEx 16.2005X Issue: 7
Alterations not authorised by Simtars may invalidate this certification.

AUSPROOF PTY LTD								
© COPYRIGHT RESERVED			DRAWN BY G.Coumessos					
DIMENSIONS (Metric-millimetre-mm) UNLESS OTHERWISE SPECIFIED	X.X 0.1 X.XX 0.05		APPROVED BY C.Taylor	DRAWING NUMBER	PRODUCT NAME	1	07/10/2020	D.Jensen	Updaed to IECEx Standards
ALL SURFACES TO UNLESS OTHERWISE NOTED			SIZE A3	ExRPR150M2-C1102	150 PLUG & RECEP'L ENGAGED CUSTOMER COPY	REVISION NUMBER	REVISION DATE	REVISION BY	REVISION DESCRIPTION

Ex

Ex

RECEPTACLE CONTACT/INSULATOR/CAGE ASSEMBLY
FLAME PROOF PATHS

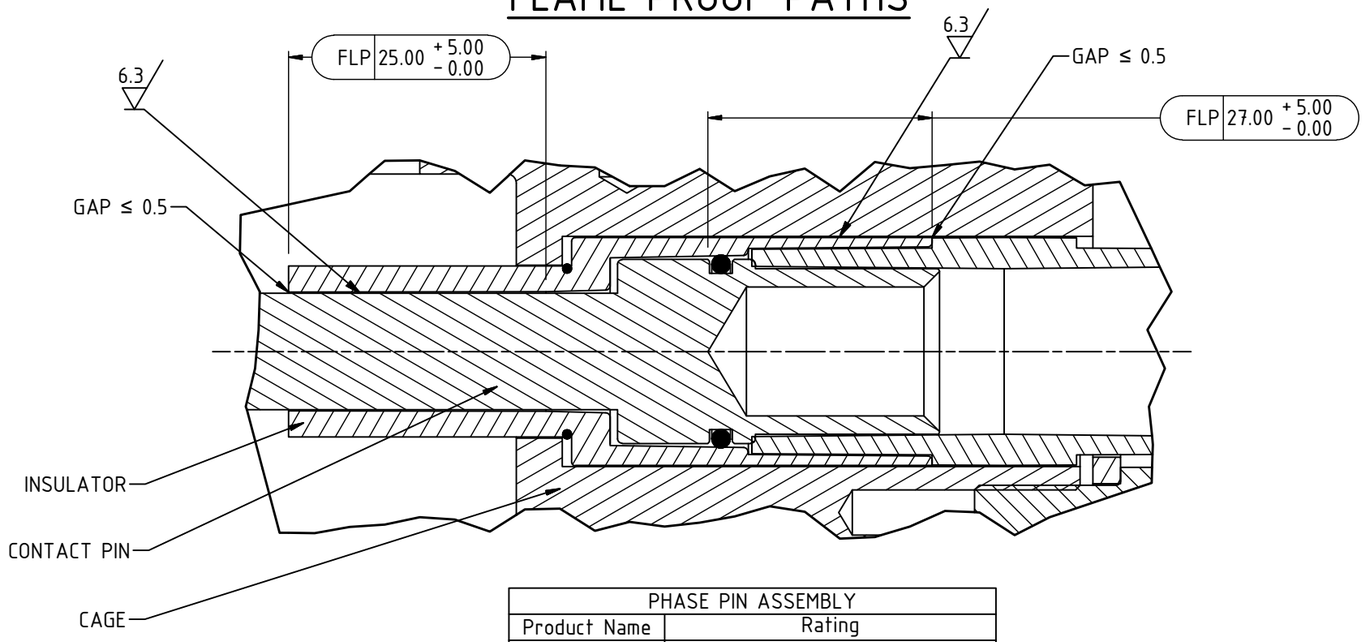

PHASE PIN ASSEMBLY	
Product Name	Rating
R114	1100V/150A
R614	660V/150A

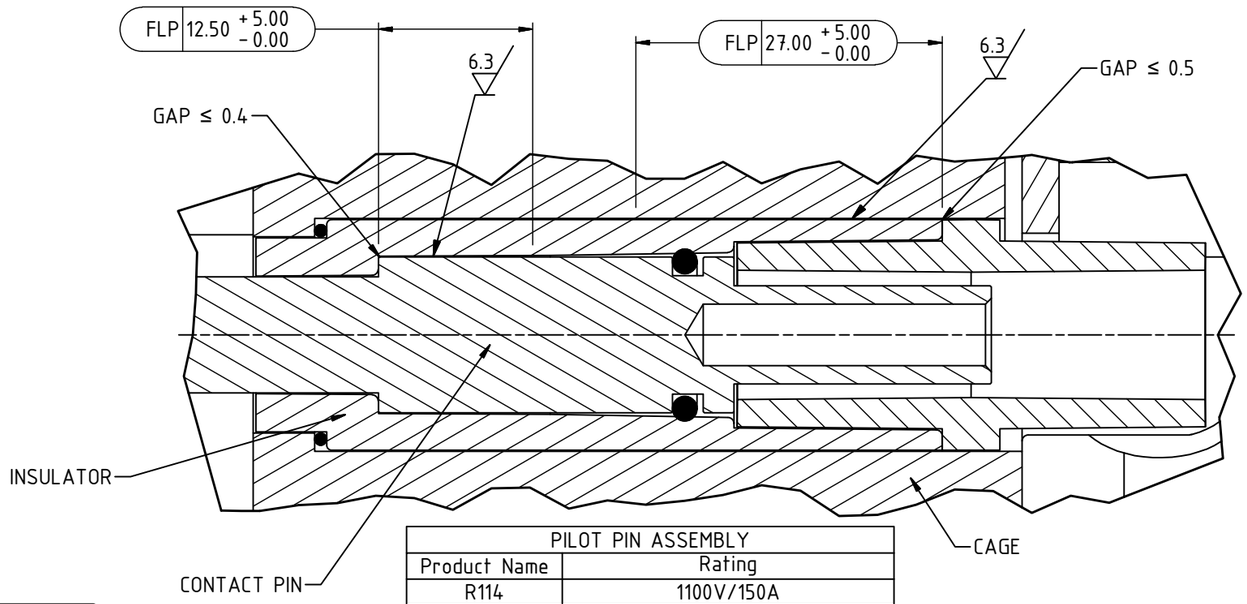

PILOT PIN ASSEMBLY	
Product Name	Rating
R114	1100V/150A
R614	660V/150A

This drawing forms part of the documentation for Certification: ANZEx 16.2005X Issue: 7
Alterations not authorised by Simtars may invalidate this certification.

AUSPROOF PTY LTD

© COPYRIGHT RESERVED

DIMENSIONS (Metric-millimetre-mm) UNLESS OTHERWISE SPECIFIED ALL SURFACES TO UNLESS OTHERWISE NOTED	X.X 0.1 X.XX 0.05		DRAWN BY G.Coumessos APPROVED BY C.Taylor SIZE A3	DRAWING NUMBER ExRPR150M2-C1103	PRODUCT NAME 150 FLAME PATH SPECIFICATIONS CUSTOMER COPY	1 REVISION NUMBER	07/10/2020 REVISION DATE	D.Jensen REVISION BY	Updaed to IECEx Standards REVISION DESCRIPTION

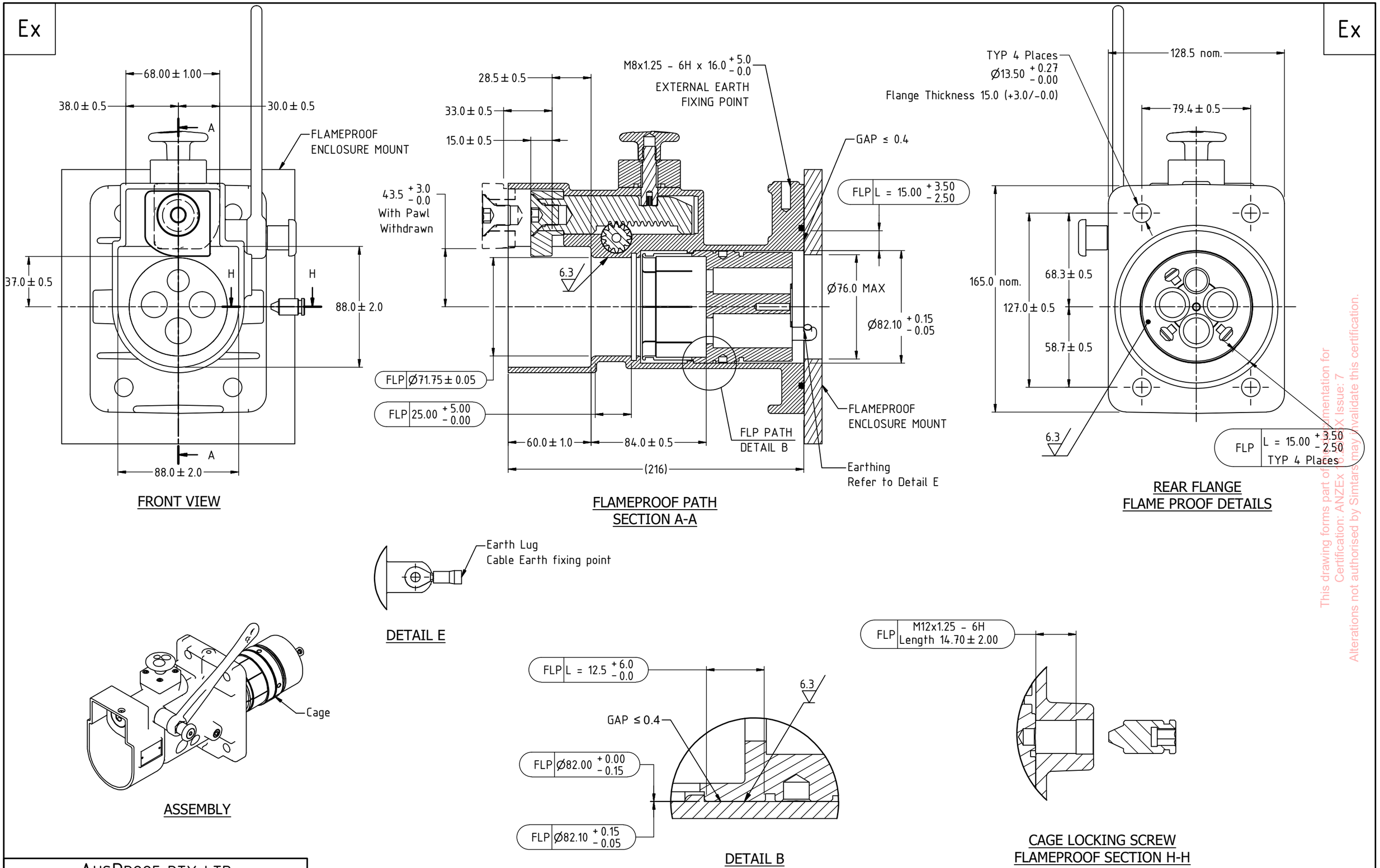

This drawing forms part of the documentation for Certification: ANZEx 18.0 XX Issue: 7
Alterations not authorised by Simtars may invalidate this certification.

AUSPROOF PTY LTD

© COPYRIGHT RESERVED

DIMENSIONS (Metric-millimetre-mm) UNLESS OTHERWISE SPECIFIED	X.X 0.1 X.XX 0.05	DRAWN BY G.Coumessos						
ALL SURFACES TO UNLESS OTHERWISE NOTED		APPROVED BY C.Taylor	DRAWING NUMBER ExRPR150M2-C1104	PRODUCT NAME Com 150 QR Receptacle Body CUSTOMER COPY	1	07/10/2020	D.Jensen	Updaed to IECEx Standards
		SIZE A3			REVISION NUMBER	REVISION DATE	REVISION BY	REVISION DESCRIPTION

Ex

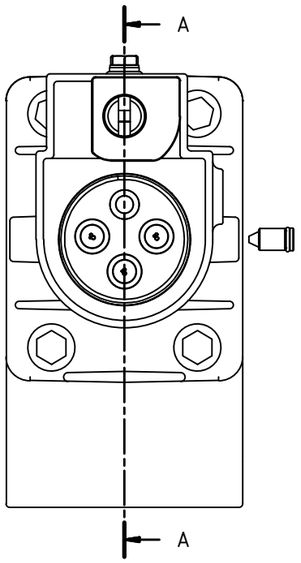

FRONT VIEW

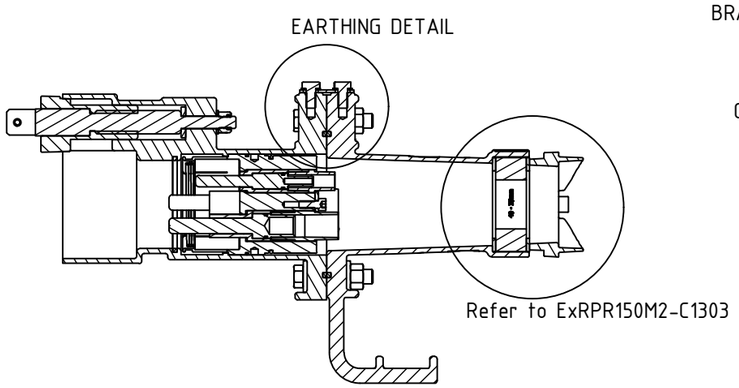

RECEPTACLE/GLAND ASSEMBLY
FLAMEPROOF PATH
SECTION A-A

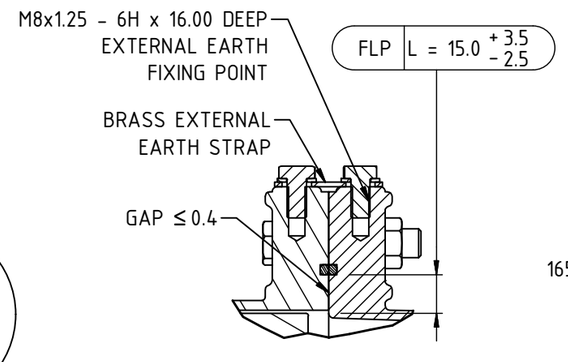

EARTHING DETAIL

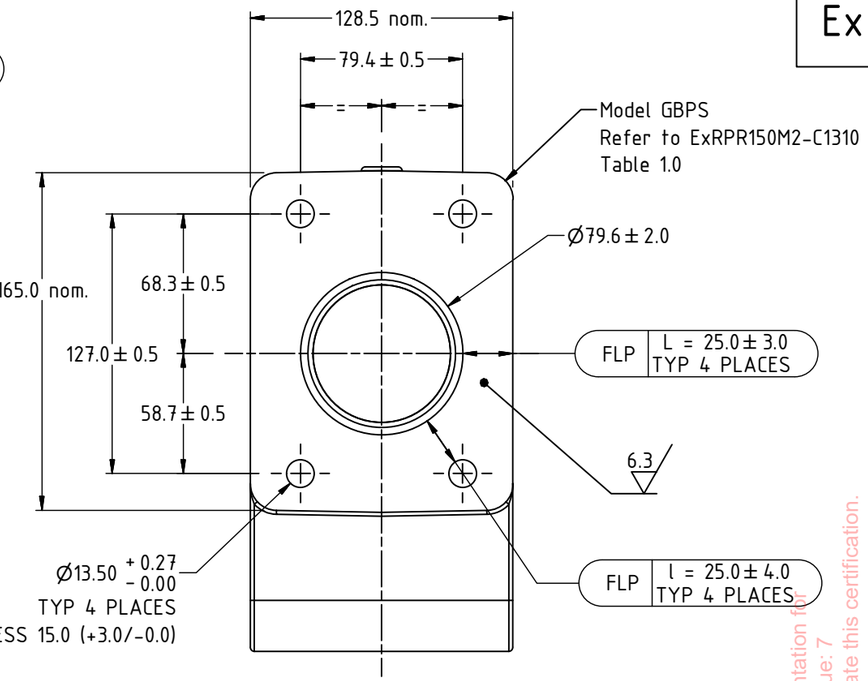

GLAND BRACKET
REAR FLANGE
NO O-RING
FLAME PROOF DETAILS

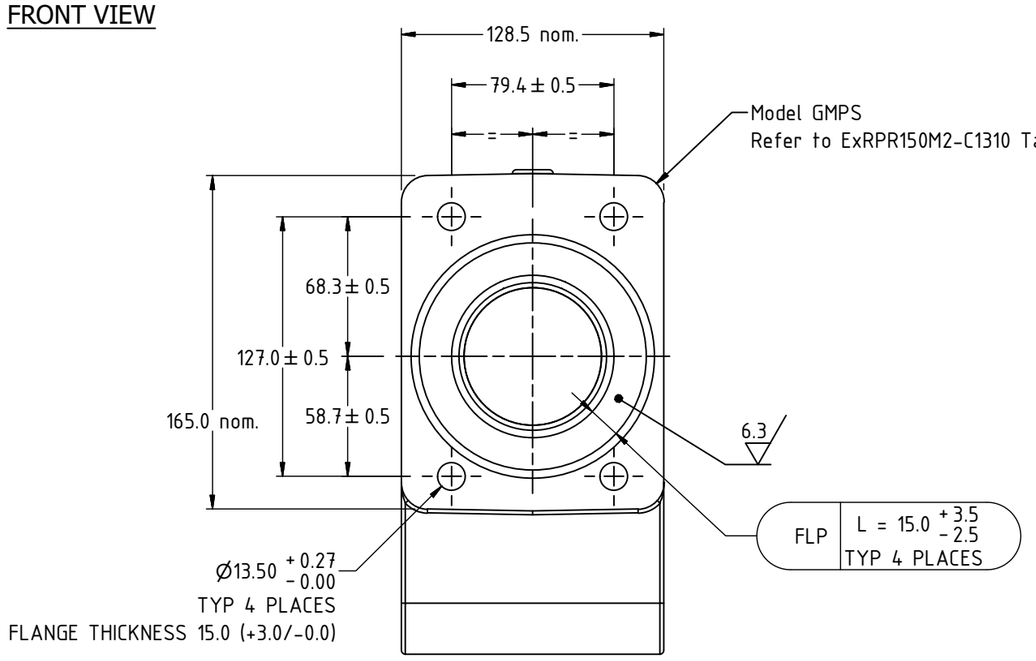

GLAND MOUNT
REAR FLANGE WITH O-RING
FOR OPTIONAL MOUNTING
FLAME PROOF DETAILS



GLAND BRACKET / GLAND MOUNT
PRODUCT DATA LABEL
Refer to ExRPR150M2-C1310 Table 1.0

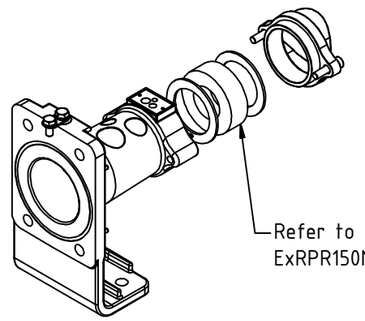

ASSEMBLY

Ex

This drawing forms part of the documentation for Certification: ANZEx 16.2005X Issue: 7
Alterations not authorised by Simtars may invalidate this certification.

AUSPROOF PTY LTD								
© COPYRIGHT RESERVED			DRAWN BY G.Coumessos					
DIMENSIONS (Metric-millimetre-mm) UNLESS OTHERWISE SPECIFIED	X.X 0.1 X.XX 0.05		APPROVED BY C.Taylor	DRAWING NUMBER ExRPR150M2-C1105	PRODUCT NAME Common 150 Gland Bracket CUSTOMER COPY	4	08/01/2025	D.MINENKO	Refer to drawings for Gland details: ExRPR150M2-C1303
ALL SURFACES TO UNLESS OTHERWISE NOTED			SIZE A3			REVISION NUMBER	REVISION DATE	REVISION BY	REVISION DESCRIPTION

Ex

Ex

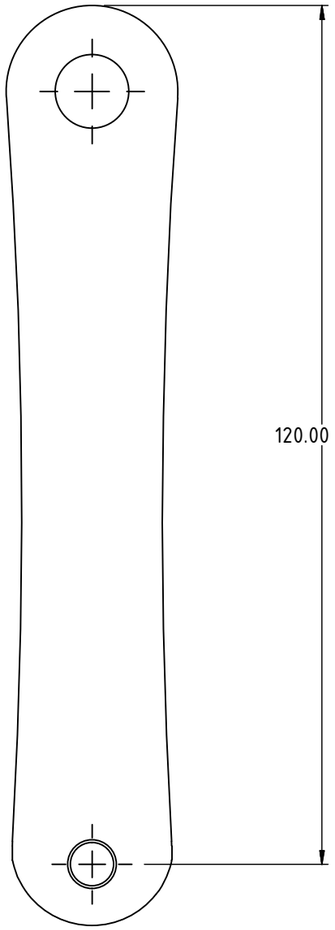

JACK IN HANDLE

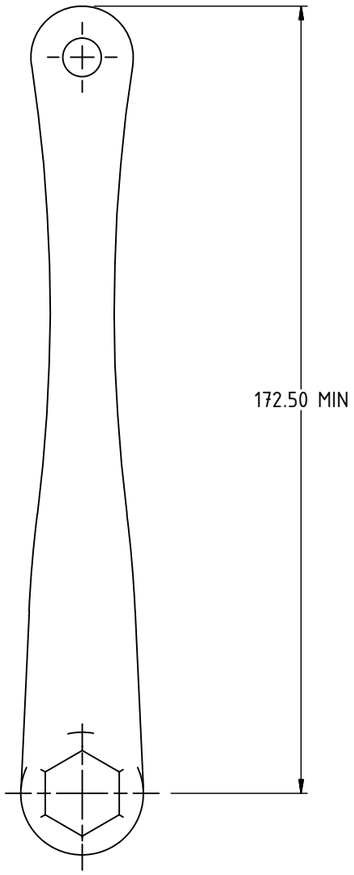

QUICK RELEASE HANDLE

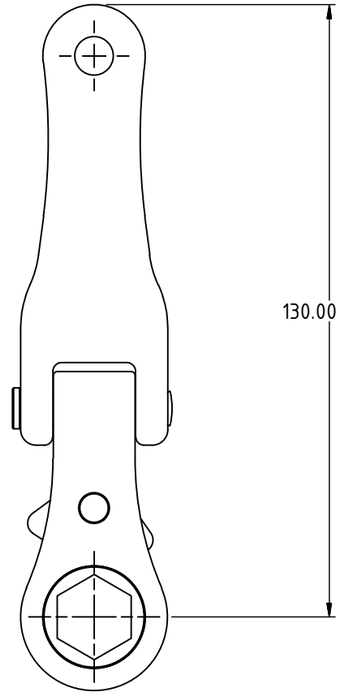

RATCHET RELEASE HANDLE

This drawing forms part of the documentation for
Certification: ANZEx 16.2005X Issue: 7
Alterations not authorised by Simtars may invalidate this certification.

AUSPROOF PTY LTD								
© COPYRIGHT RESERVED			DRAWN BY A.Castle					
DIMENSIONS (Metric-millimetre-mm) UNLESS OTHERWISE SPECIFIED	X.X 0.1		APPROVED BY C.Taylor	DRAWING NUMBER	PRODUCT NAME	0	05/10/2022	A.Castle	Added Operating Mechanism
ALL SURFACES TO UNLESS OTHERWISE NOTED	X.XX 0.05		SIZE A3	ExRPR150M2-C1106	Com 150 Operating Mech CUSTOMER COPY	REVISION NUMBER	REVISION DATE	REVISION BY	REVISION DESCRIPTION

Ex

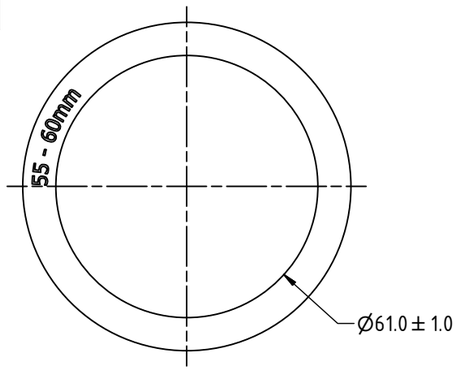

CABLE COMPRESSION WASHER

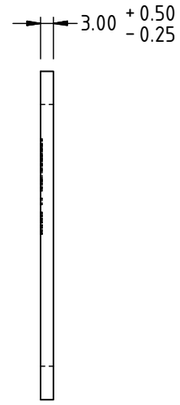

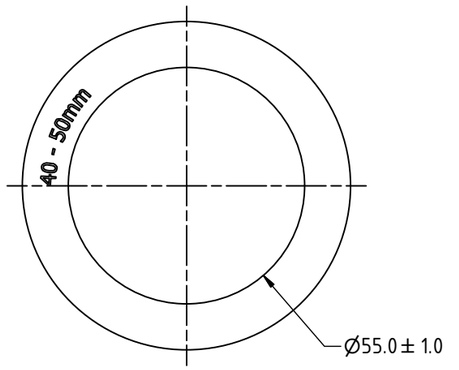

CABLE COMPRESSION WASHER

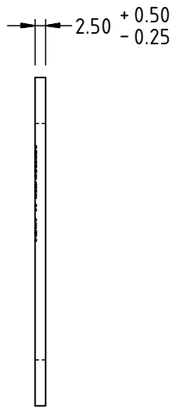

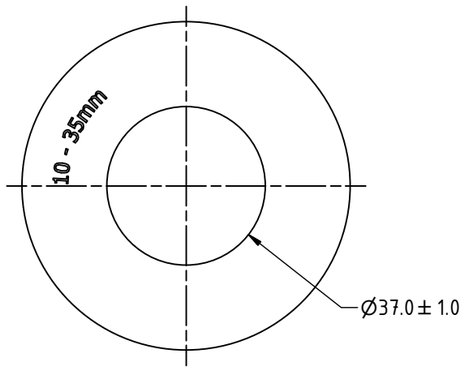

CABLE COMPRESSION WASHER

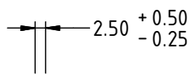

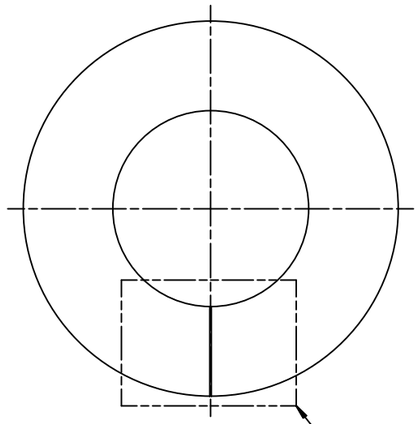

TOP VIEW
COMPRESSION GLAND RUBBER

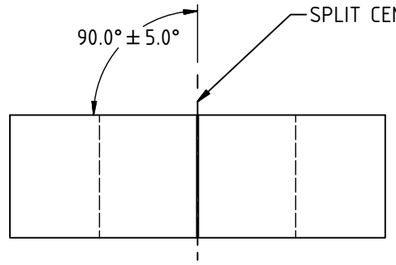

SIDE VIEW
COMPRESSION GLAND RUBBER

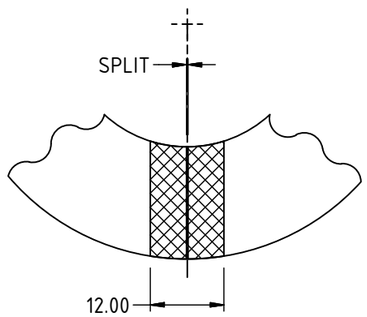

DETAIL 1

SPLIT IN RUBBER MUST BE CONTAINED
WITH IN THE HATCHED AREA
TYPICAL ALL COMPRESSION GLAND RUBBER SIZES

Ex

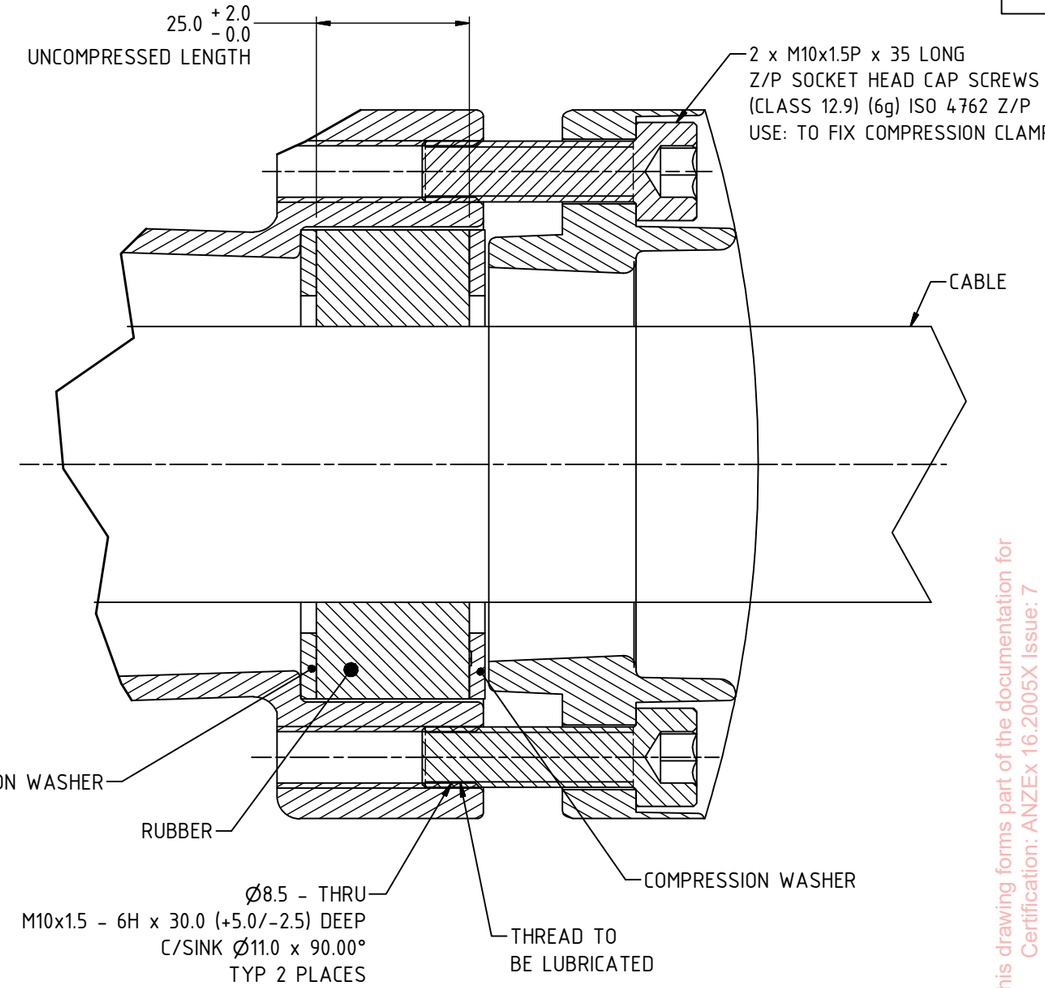

CABLE ENTRY DETAIL

Compression Gland Part Sizes		
Gland Rubber I.D. (± 1.0)	Washer I.D. (± 1.0)	To Suit Cable O.D.
15	37	10 - 15
20	37	15 - 20
25	37	20 - 25
30	37	25 - 30
35	37	30 - 35
40	55	35 - 40
45	55	40 - 45
50	61	45 - 50
55	61	50 - 55
60	61	55 - 60

Note:
Rubber compression gland to be torqued to 25Nm

THREAD CLASS TO ISO 965
COARSE THREAD PITCH TO ISO 262

This drawing forms part of the documentation for Certification: ANZEx 16.2005X Issue: 7
Alterations not authorised by Simtars may invalidate this certification.

AUSPROOF PTY LTD

© COPYRIGHT RESERVED

DIMENSIONS (Metric-millimetre-mm) UNLESS OTHERWISE SPECIFIED ALL SURFACES TO UNLESS OTHERWISE NOTED	X.X 0.1 X.XX 0.05	DRAWN BY G.Coumessos APPROVED BY C.Taylor SIZE A3	DRAWING NUMBER ExRPR150M2-C1303	PRODUCT NAME Common 150 Plug Cable Clamp Assembly CUSTOMER COPY	3	12/12/2024	D.MINENKO	ADDED BOLT HEAD PROTECTION & WASHER THICKNESS
					REVISION NUMBER	REVISION DATE	REVISION BY	REVISION DESCRIPTION

Ex

Ex

FASTENER SCHEDULE

3 x M6x1.0 x 8 LONG Z/P BUTTON HEAD SOCKET CAP SCREWS (Class 12.9) (6g) ISO 7380
AND 3 x M6 S/S BELLEVILLE LOCK WASHERS
USE: EARTH FIXING SCREWS FOR PLUG CAGE BACK

1 x M6x1.0 x 100 LONG Z/P SOCKET HEAD CAP SCREW (Class 12.9) (6g) ISO 4762
USE: TO FIX PLUG FRONT CAGE AND BACK CAGE TOGETHER

1 x M3x0.5 x 4 LONG S/S SOCKET HEAD CAP SCREW (700 MPa) (6g) ISO 4762
USE: FOR LOCATION LUG INSIDE PLUG

2 x M10x1.5 x 35 LONG Z/P SOCKET HEAD CAP SCREWS (Class 12.9) (6g) ISO 4762
USE: TO FIX COMPRESSION CLAMP

1 x M10x1.5 Z/P NYLOC NUT (Class 8) (6H) ISO 7040
AND 1 x M10 Z/P WASHER (Class 8) (200 HV) ISO 7089
USE: TO FIX PAWL SCREW INTO SOCKET BODY

1 x M6x1.0 x 16 LONG Z/P SOCKET HEAD CAP SCREW (Class 12.9) (6g) ISO 4762
USE: TO FIX SOCKET STAR RETAINING PLATE

3 x M6x1.0 x 8 LONG Z/P BUTTON HEAD SOCKET CAP SCREWS (Class 12.9) (6g) ISO 7380
AND 3 x M6 S/S BELLEVILLE LOCK WASHERS
USE: EARTH FIXING SCREWS FOR SOCKET CAGE

4 x 4GAUGE x 1/4" Z/P HAMMER DRIVE
USE: FIXING LABEL TO RECEPTACLE AND PLUG

1 x M8x1.25 x 16 LONG Z/P SET SCREW (Class 8.8) (6g) ISO 4017
AND 1 x M8 S/S BELLEVILLE LOCK WASHER
USE: EARTH FIXING SCREW ON MAIN FLANGE

4 x M12x1.75 x 55 (MIN LENGTH) Z/P SET SCREWS (Class 4.6) (6g) ISO 4017
WITH 4 x M12 x 1.75 Z/P NUTS (Class 8) (6H) ISO 4032
AND 8 x M12 Z/P WASHERS (Class 8) (200 HV) ISO 7089
OPTIONAL M12 x 1.75 HARDWARE MAY BE USED MUST HAVE A MINIMUM YIELD STRESS OF 240MPa
USE: TO FIX GLAND BRACKET TO RECEPTACLE

FIXING RECEPTACLE TO Ex d ENCLOSURE: PROPERTY CLASS ≥ 4.6*
*NOTE: SPECIFIED FASTENER PROPERTY CLASS TO BE ≥ THE FASTENER PROPERTY CLASS SPECIFIED FOR THE Ex ENCLOSURE.

THREAD CLASS TO ISO 965
COARSE THREAD PITCH TO ISO 262

This drawing forms part of the documentation for
Certification: ANZEx 16.2005X Issue: 7
Alterations not authorised by Simtars may invalidate this certification.

AUSPROOF PTY LTD

© COPYRIGHT RESERVED

DRAWN BY G.Coumessos								
DIMENSIONS (Metric-millimetre-mm) UNLESS OTHERWISE SPECIFIED	X.X 0.1 X.XX 0.05		APPROVED BY C.Taylor	DRAWING NUMBER	PRODUCT NAME	1	07/10/2020	D.Jensen	Updaed to IECEx Standards
ALL SURFACES TO UNLESS OTHERWISE NOTED			SIZE A3	ExRPR150M2-C1307	Fastener Schedule CUSTOMER COPY	REVISION NUMBER	REVISION DATE	REVISION BY	REVISION DESCRIPTION

Ex

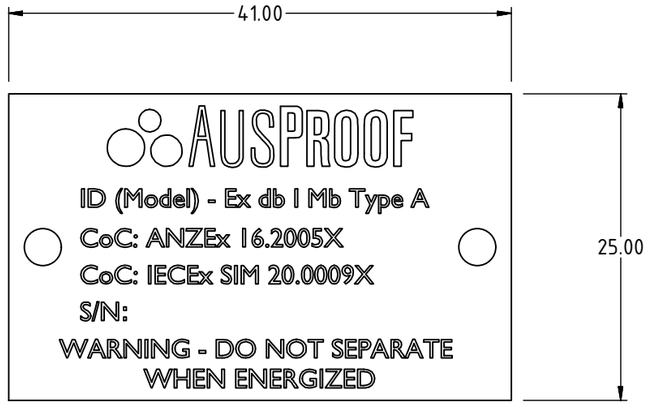

GLAND BRACKET / GLAND MOUNT
PRODUCT DATA LABEL
AS PER TABLE 1.0

Table 1.0	
Model	Volts Range
GBPS	660 - 1100
GMPS	660 - 1100

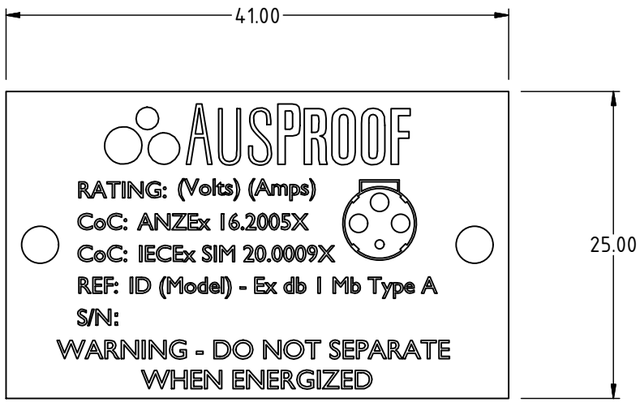

PLUG AND RECEPTACLE
PRODUCT DATA LABEL
AS PER TABLE 2.0

Table 2.0		
Model	Volts	Amps
P614	660	150
R614	660	150
QRR614	660	150
P114	1100	150
R114	1100	150
QRR114	1100	150

Ex

This drawing forms part of the documentation for
Certification: ANZEx 16.2005X Issue: 7
Alterations not authorised by Simtars may invalidate this certification.

AUSPROOF PTY LTD

© COPYRIGHT RESERVED

DRAWN BY: C.Taylor
APPROVED BY: L.Richards
SIZE: A3
DRAWING NUMBER: ExRPR150M2-C1310
PRODUCT NAME: Product marking labels CUSTOMER COPY

DIMENSIONS (Metric-millimetre-mm) UNLESS OTHERWISE SPECIFIED
X.X 0.1
X.XX 0.05
ALL SURFACES TO UNLESS OTHERWISE NOTED

REVISION NUMBER	REVISION DATE	REVISION BY	REVISION DESCRIPTION
1	07/10/2020	D.Jensen	Updaed to IECEx Standards

Ex

Ex

1 x M10x1.5 x 25 Z/P BHCS PN1824 (MIN Class 8.8) (6g) ISO 7380 OR A2/A4-70 STAINLESS STEEL PN10147
AND 1 x 3/8 x 1" Z/P WASHER (Min Class 5) (140 HV) ISO 7089 PN1941 OR A2/A4-70 STAINLESS STEEL PN10152
USE: TO FIX RATCHET RELEASE

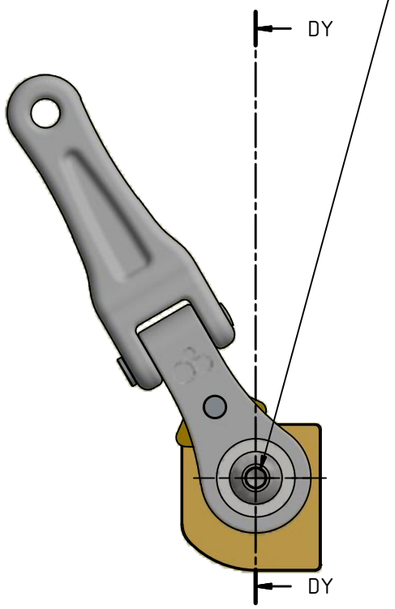

FRONT VIEW

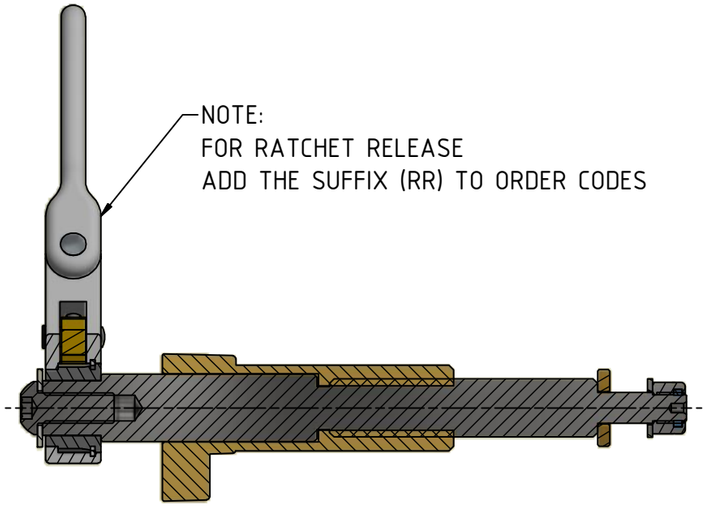

SECTION DY-DY

MODEL IDENTIFICATION CROSS REFERENCE TABLE
RECEPTACLE TYPE
R614RR
R114RR

1 x M8x1.25 x 20 Z/P SHCS PN10119 (MIN Class 8.8) (6g) ISO 4762 OR A2/A4-70 STAINLESS STEEL PN1077
USE: TO FIX RATCHET RELEASE

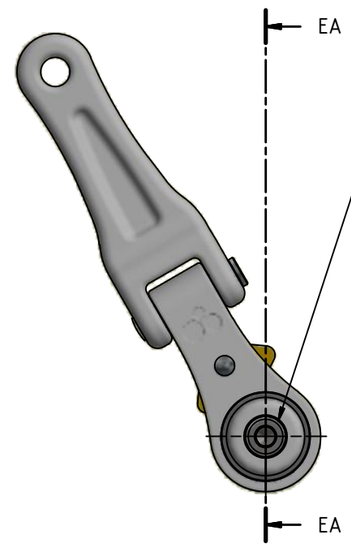

FRONT VIEW

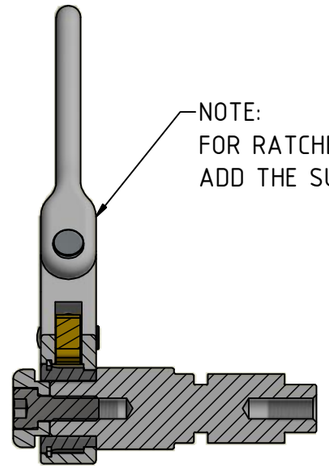

SECTION EA-EA

MODEL IDENTIFICATION CROSS REFERENCE TABLE
QUICK RELEASE RECEPTACLE TYPE
QRR614RR
QRR114RR

This drawing forms part of the documentation for
Certification: ANZEx 16.2005X Issue: 7
Alterations not authorised by Simtars may invalidate this certification.

AUSPROOF PTY LTD

© COPYRIGHT RESERVED

DIMENSIONS (Metric-millimetre-mm) UNLESS OTHERWISE SPECIFIED ALL SURFACES TO UNLESS OTHERWISE NOTED	X.X 0.1 X.XX 0.05		DRAWN BY C.Taylor APPROVED BY D.Jensen SIZE A3	DRAWING NUMBER ExRPR150M2-C1311	PRODUCT NAME Common 150 Receptacle RR CUSTOMER COPY	0 REVISION NUMBER	12/12/2024 REVISION DATE	C.Taylor REVISION BY	FIXED FASTENER ISO REVISION DESCRIPTION

Ex

Ex

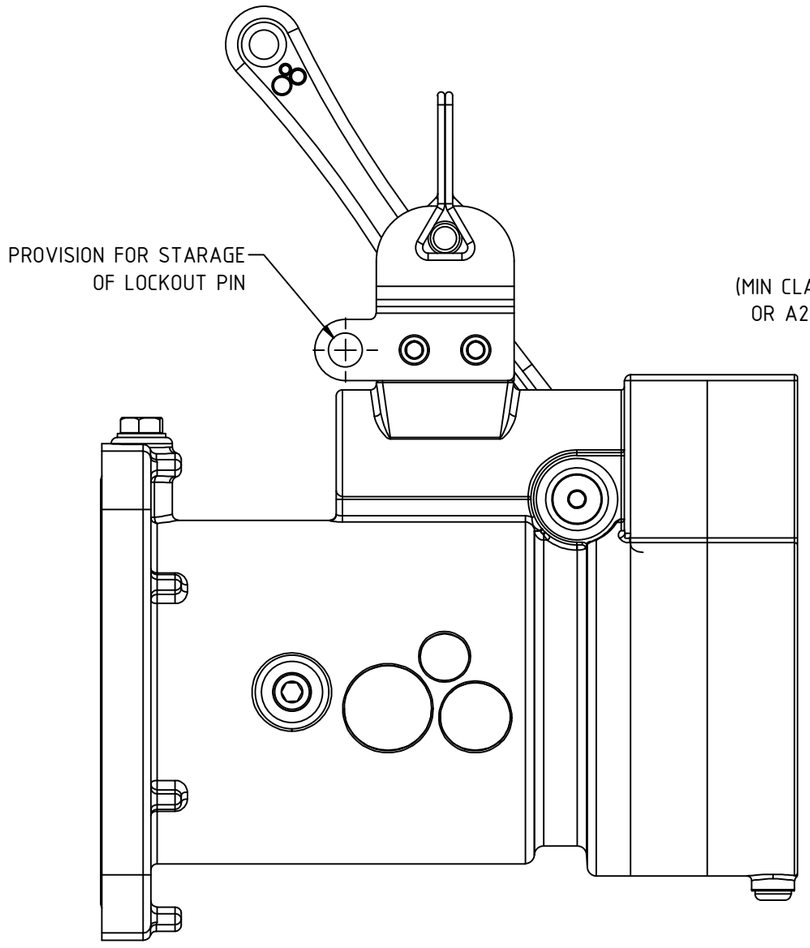

SIDE VIEW

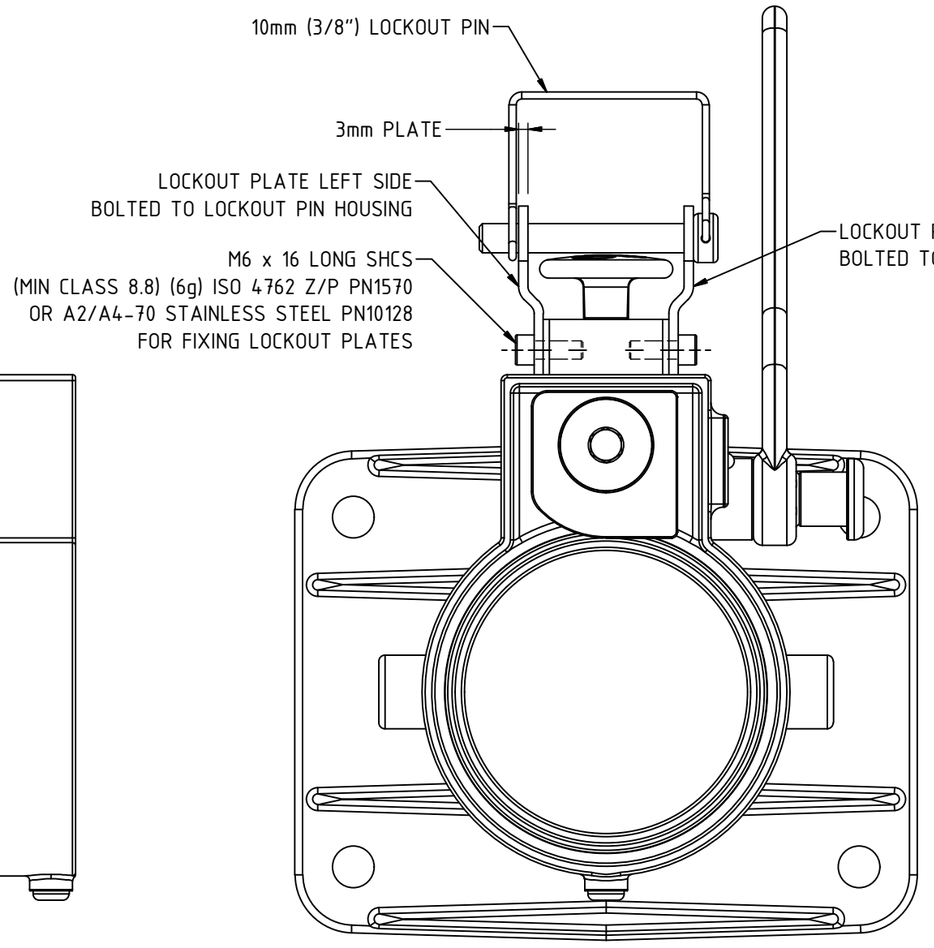

FRONT VIEW

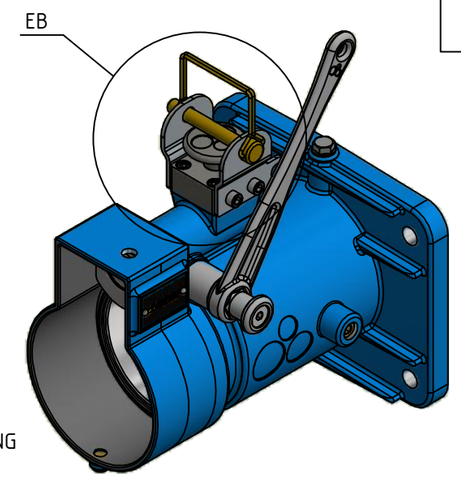

ISOMETRIC VIEW

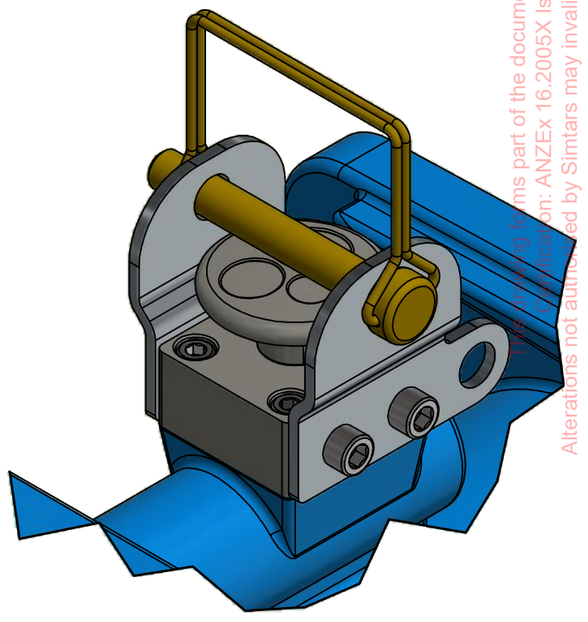

DETAIL EB
RACKING HANDLE NOT SHOWN FOR CLARITY

This drawing forms part of the documentation for
ANZEx 16.2005X Issue: 7
Alterations not authorised by Simtars may invalidate this certification.

AUSPROOF PTY LTD								
© COPYRIGHT RESERVED			DRAWN BY D.Jensen					
DIMENSIONS (Metric-millimetre-mm) UNLESS OTHERWISE SPECIFIED	X.X 0.1 X.XX 0.05		APPROVED BY C.Taylor	DRAWING NUMBER	PRODUCT NAME	0	07/03/2022	D.Jensen	INITIAL RELEASE
ALL SURFACES TO UNLESS OTHERWISE NOTED			SIZE A3	ExRPR150M2-C1312	150 Receptacle Pin Lockout CUSTOMER COPY	REVISION NUMBER	REVISION DATE	REVISION BY	REVISION DESCRIPTION

Ex

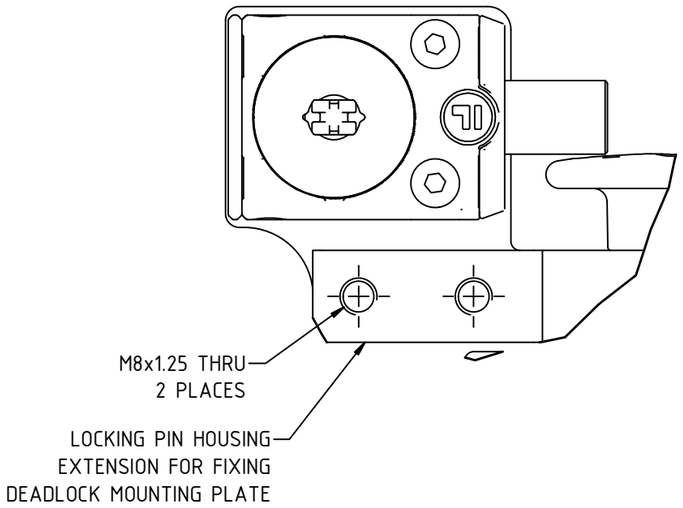

DETAIL ED

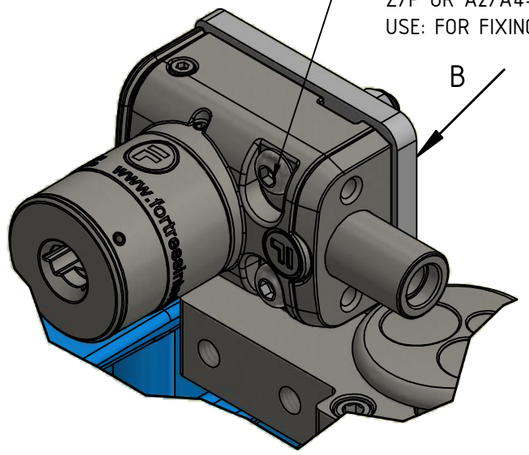

DETAIL EC

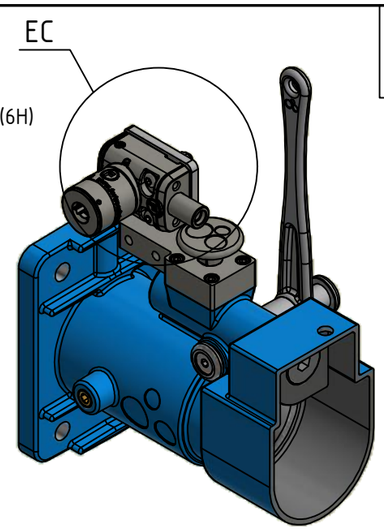

ISOMETRIC VIEW

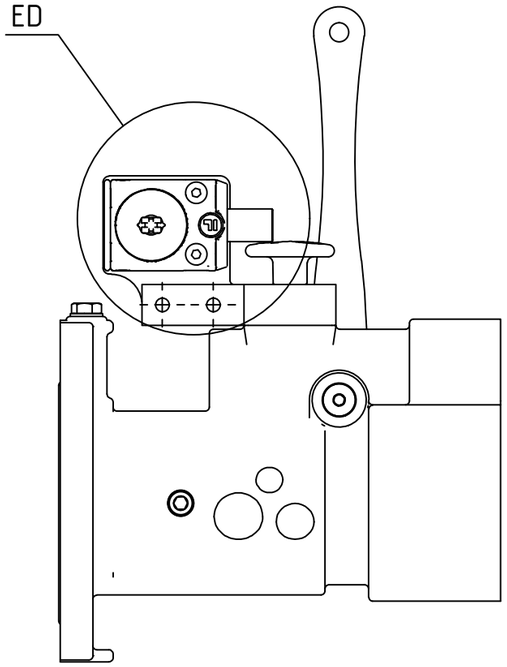

SIDE VIEW

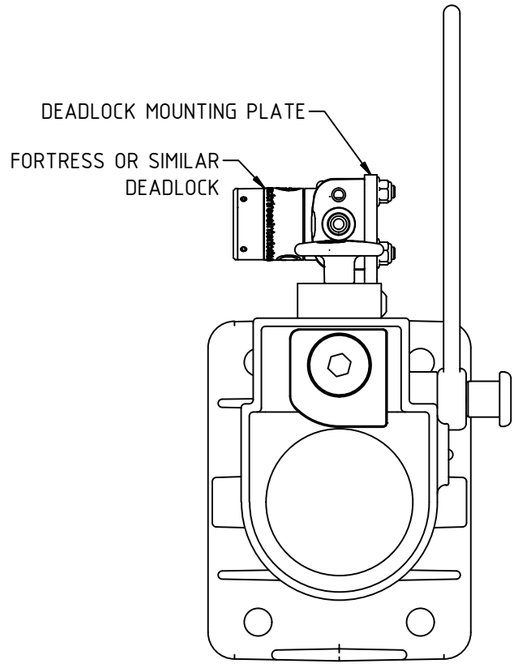

FRONT VIEW

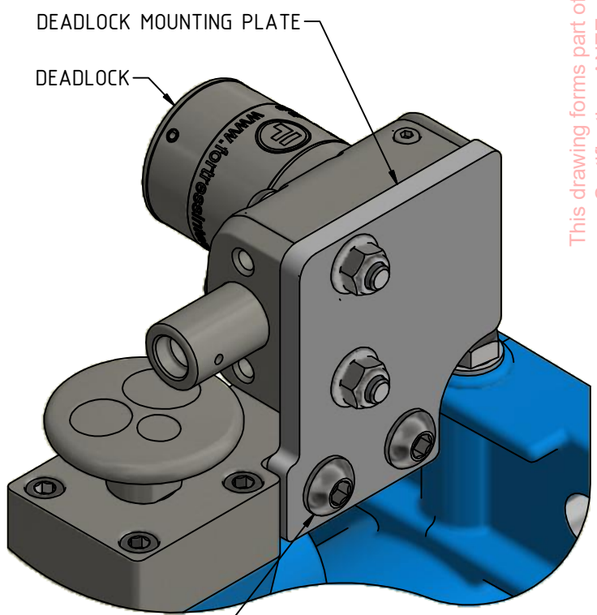

VIEW FROM B

This drawing forms part of the documentation for
Certification: ANZEx 16.2005X Issue: 7
Alterations not authorised by Simtars may invalidate this certification.

AUSPROOF PTY LTD			DRAWN BY D.Jensen					
© COPYRIGHT RESERVED			APPROVED BY C.Taylor	DRAWING NUMBER ExRPR150M2-C1313	PRODUCT NAME 150 Receptacle Deadlock CUSTOMER COPY	0	12/12/2024	D.Jensen	INITIAL RELEASE
DIMENSIONS (Metric-millimetre-mm) UNLESS OTHERWISE SPECIFIED	X.X 0.1 X.XX 0.05		SIZE A3			REVISION NUMBER	REVISION DATE	REVISION BY	REVISION DESCRIPTION
ALL SURFACES TO UNLESS OTHERWISE NOTED									

Ex

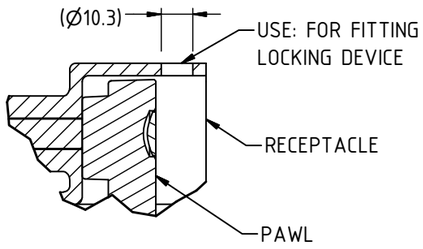

DETAIL FOR LOCKING DEVICE LOCATION

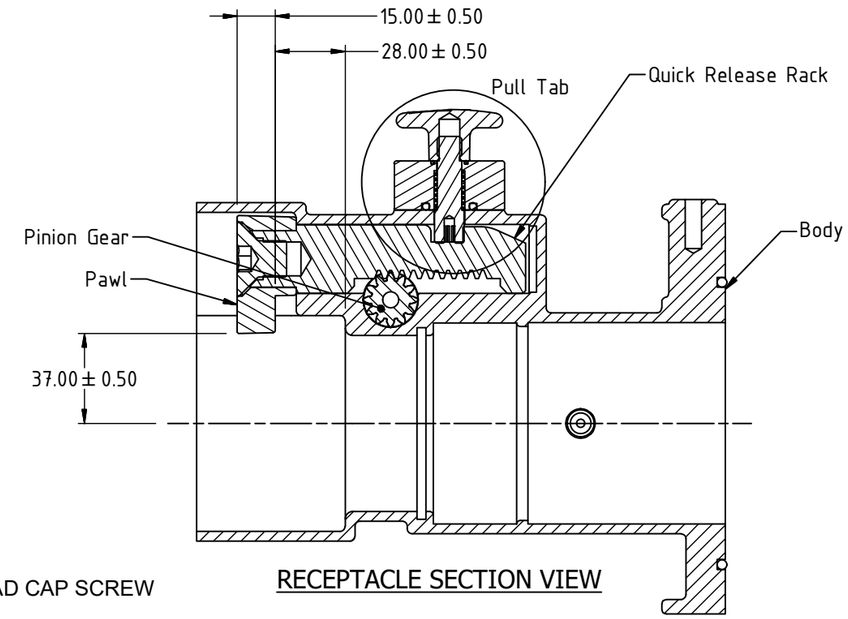

RECEPTACLE SECTION VIEW

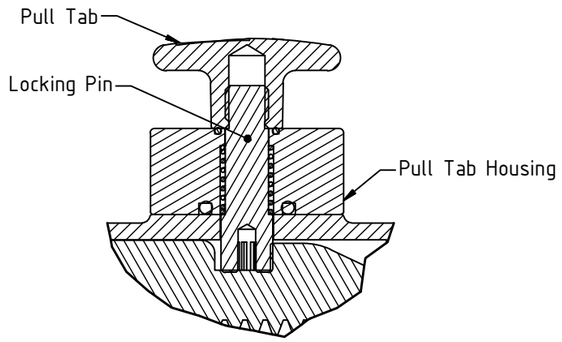

PULL TAB DETAIL

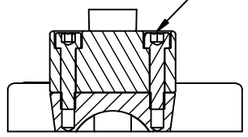

SECTION CU-CU



RECEPTACLE PRODUCT DATA LABEL
Refer to ExRPR150M2-1310 Table 2.0

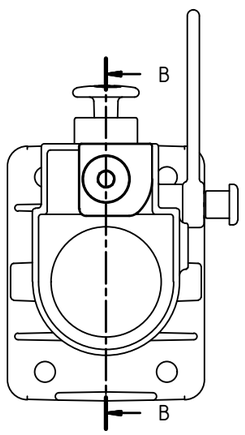

PAWL WITHDRAWN

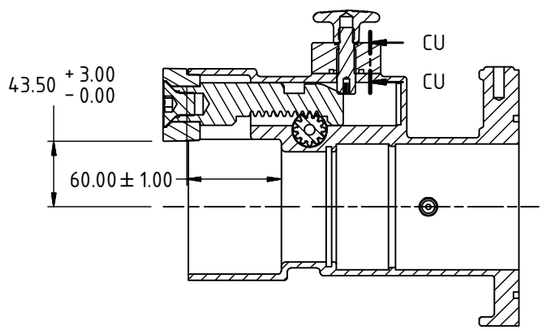

SECTION B-B

MODEL IDENTIFICATION CROSS REFERENCE TABLE
QUICK RELEASE TYPE RECEPTACLE
QRR614
QRR114

This drawing forms part of the documentation for Certification: ANZEx 16.2005X Issue: 7
Alterations not authorised by Simtars may invalidate this certification.

AUSPROOF PTY LTD			DRAWN BY G.Coumessos					
© COPYRIGHT RESERVED			APPROVED BY C.Taylor	DRAWING NUMBER ExRPR150QR-C1308	PRODUCT NAME 150 QR Receptacle Body CUSTOMER COPY	0	14/02/2019	D.Jensen	Updaed to IECEx Standards
DIMENSIONS (Metric-millimetre-mm) UNLESS OTHERWISE SPECIFIED	X.X 0.1 X.XX 0.05		SIZE A3			REVISION NUMBER	REVISION DATE	REVISION BY	REVISION DESCRIPTION
ALL SURFACES TO UNLESS OTHERWISE NOTED									

Ex

Ex

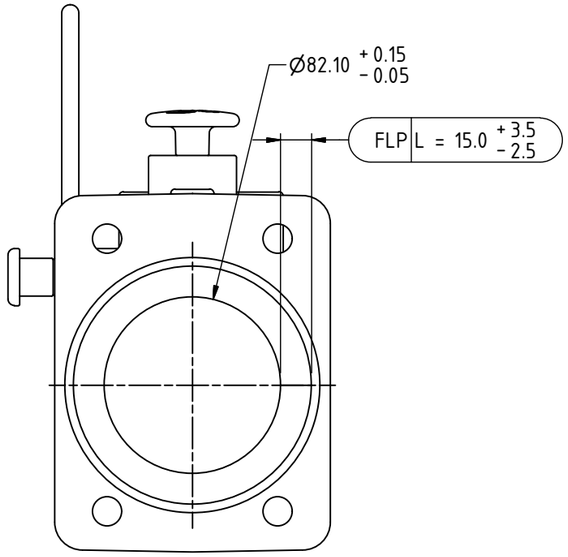

REAR FLANGE FLAMEPATH

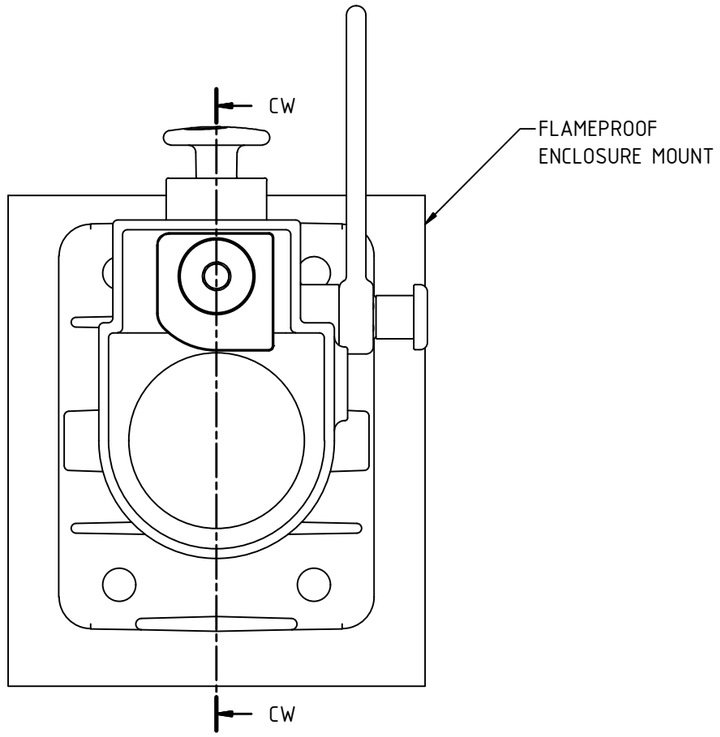

RECEPTACLE FRONT VIEW
MOUNTED TO ENCLOSURE

SECTION CW-CW

This drawing forms part of the documentation for
Certification: ANZEx 16.2005X Issue: 7
Alterations not authorised by Simtars may invalidate this certification.

AUSPROOF PTY LTD								
© COPYRIGHT RESERVED			DRAWN BY G.Coumessos					
DIMENSIONS (Metric-millimetre-mm) UNLESS OTHERWISE SPECIFIED	X.X 0.1 X.XX 0.05		APPROVED BY C.Taylor	DRAWING NUMBER	PRODUCT NAME	0	14/02/2019	D.Jensen	Updaed to IECEx Standards
ALL SURFACES TO UNLESS OTHERWISE NOTED			SIZE A3	ExRPR150QR-C1309	150 Receptacle Rear FLP CUSTOMER COPY	REVISION NUMBER	REVISION DATE	REVISION BY	REVISION DESCRIPTION

Ex

Ex

Note: Drawing numbers and their category
ExB2B150-C1000 - Concept Drawings
ExB2B150-C1100 - Flameproof
ExB2B150-C1200 - Product Range
ExB2B150-C1300 - General

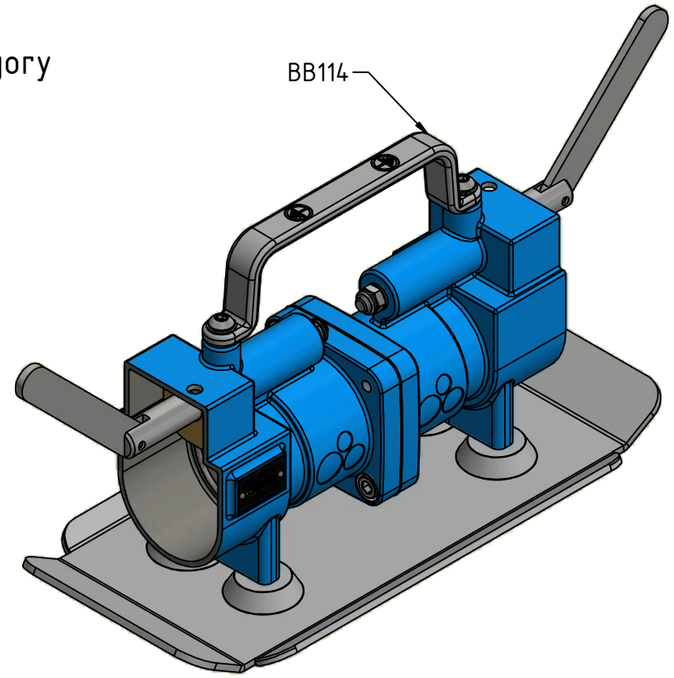

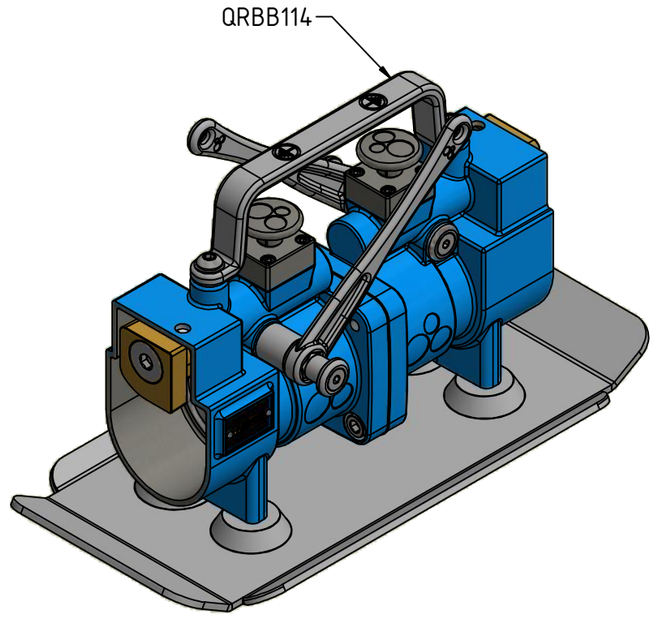

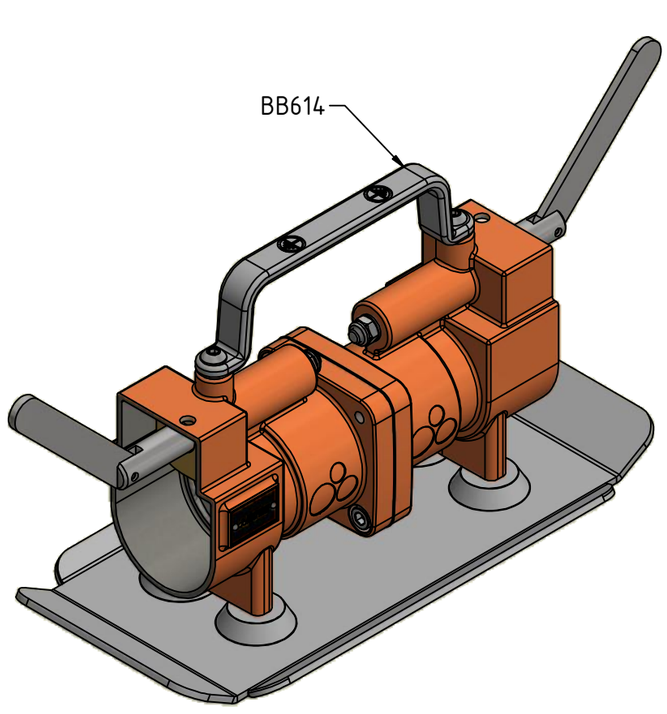

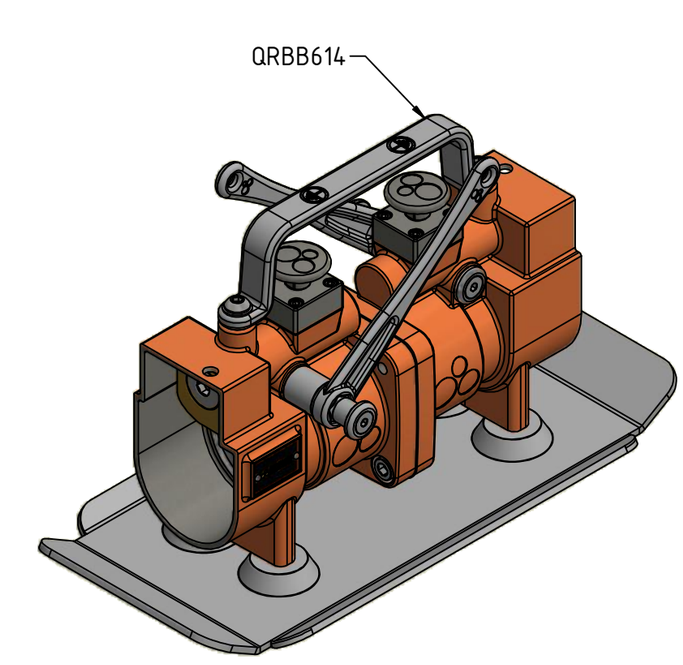

Product Name Format

Volts — Pins

QRBB114

Quick Release Back TO Back — Amps

Product Name Format

Volts — Pins

BB114

Back TO Back — Amps

This drawing forms part of the documentation for Certification: ANZEx 16.2005X Issue: 7
Alterations not authorised by Simtars may invalidate this certification.

AUSPROOF PTY LTD

© COPYRIGHT RESERVED

DIMENSIONS (Metric-millimetre-mm) UNLESS OTHERWISE SPECIFIED ALL SURFACES TO UNLESS OTHERWISE NOTED	X.X 0.1 X.XX 0.05		DRAWN BY G.Coumessos APPROVED BY C.Taylor SIZE A3	DRAWING NUMBER ExB2B150-C1000	PRODUCT NAME 150 B2B Series Index CUSTOMER COPY	0 REVISION NUMBER	05/02/2019 REVISION DATE	D.Jensen REVISION BY	Updaed to IECEx Standards REVISION DESCRIPTION

Ex

Ex

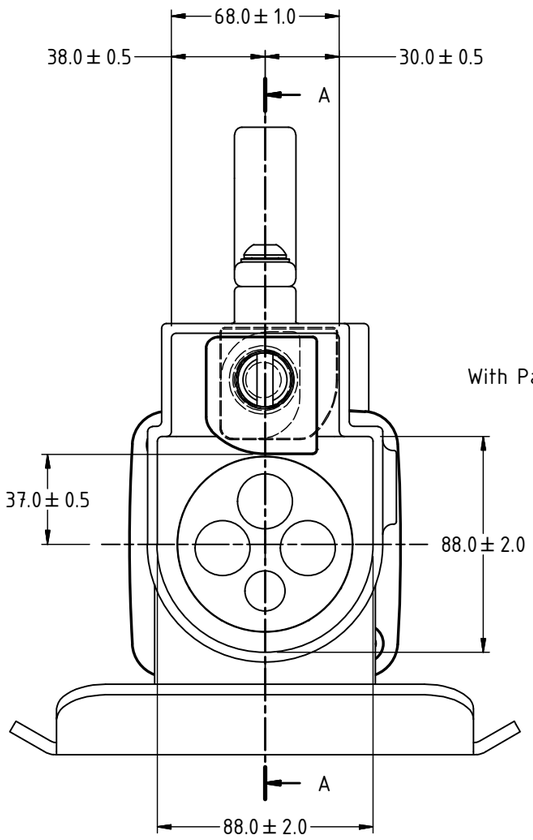

SIDE VIEW

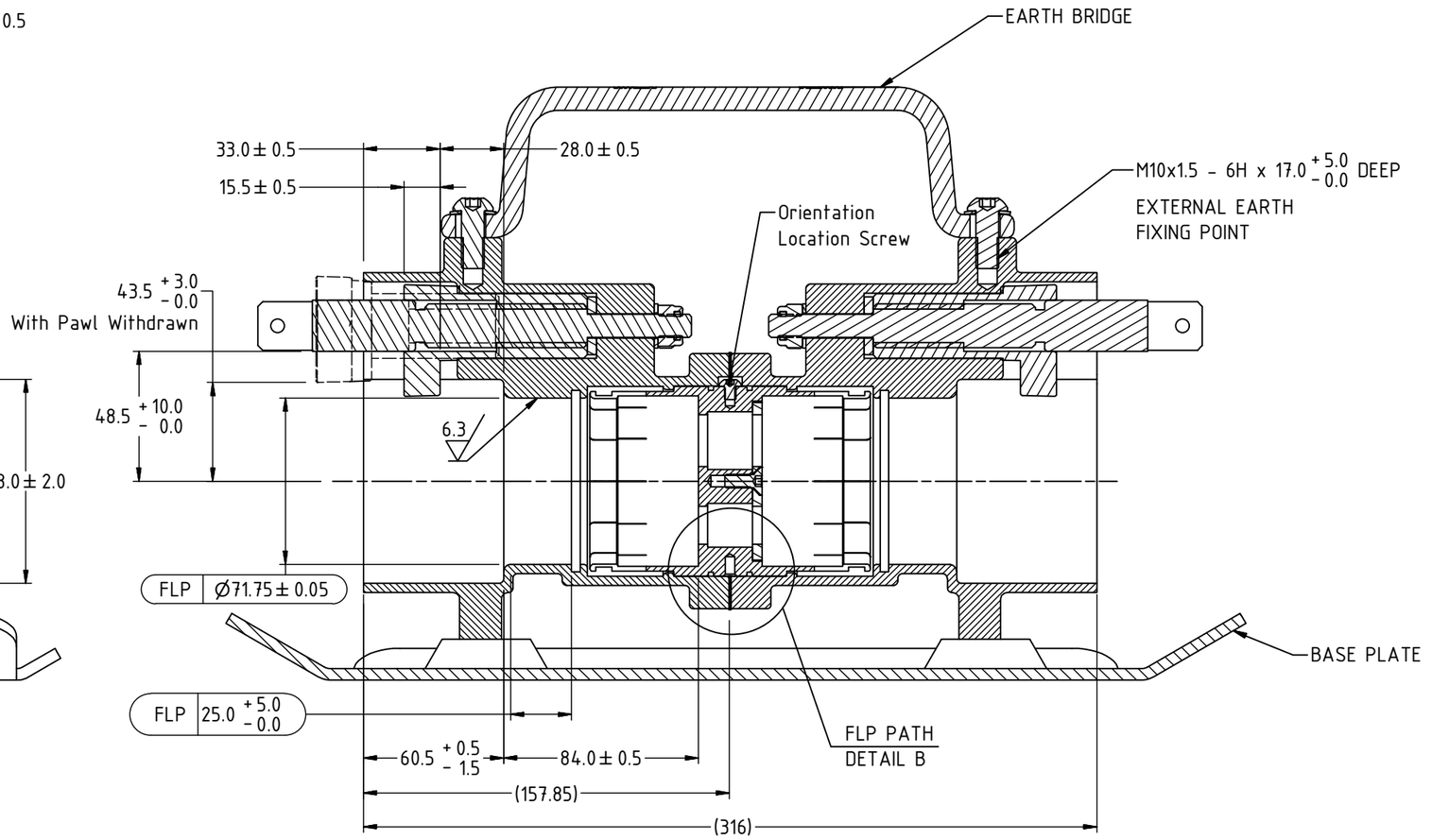

SECTION A-A

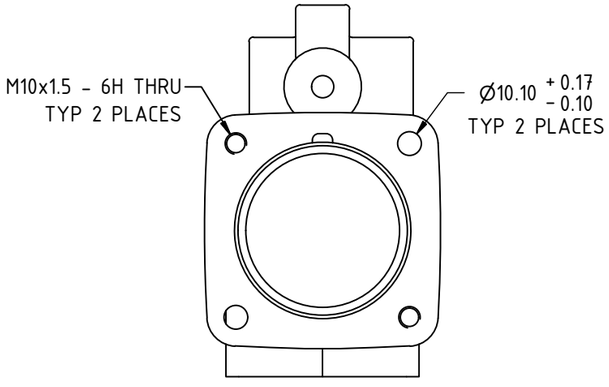

FLANGE VIEW

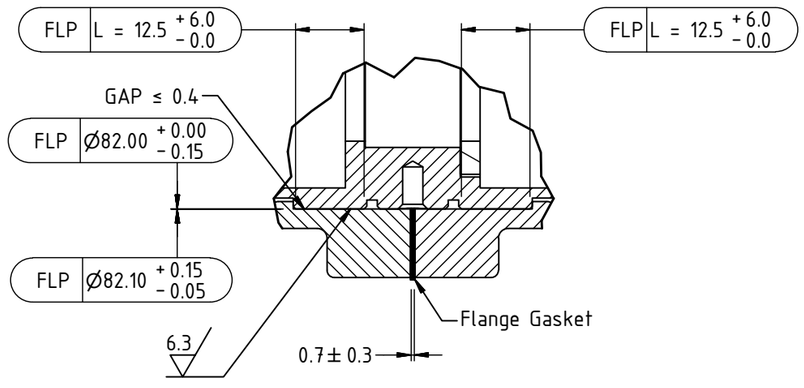

FLP PATH
DETAIL B

This drawing forms part of the documentation for Certification: ANZEx 16.2005X Issue: 7
Alterations not authorised by Simtars may invalidate this certification.

AUSPROOF PTY LTD

© COPYRIGHT RESERVED

DIMENSIONS (Metric-millimetre-mm) UNLESS OTHERWISE SPECIFIED	X.X 0.1 X.XX 0.05		DRAWN BY G.Coumessos	DRAWING NUMBER	PRODUCT NAME	0	05/02/2019	D.Jensen	Updaed to IECEx Standards
ALL SURFACES TO UNLESS OTHERWISE NOTED			APPROVED BY C.Taylor	ExB2B150-C1100	Common B2B Body CUSTOMER COPY	REVISION NUMBER	REVISION DATE	REVISION BY	REVISION DESCRIPTION
			SIZE A3						

Ex

Ex

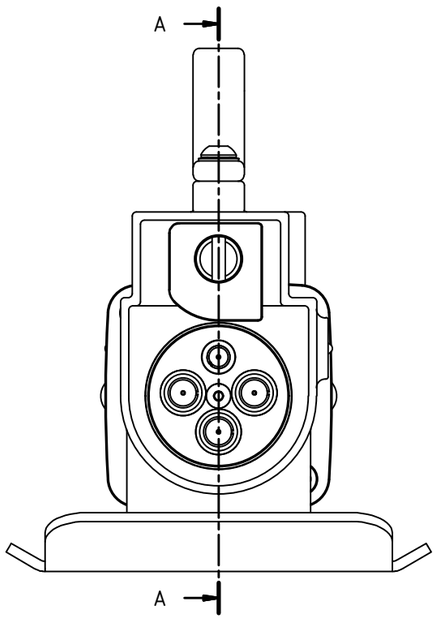

PLUG INSERTED INTO BACK TO BACK
END VIEW

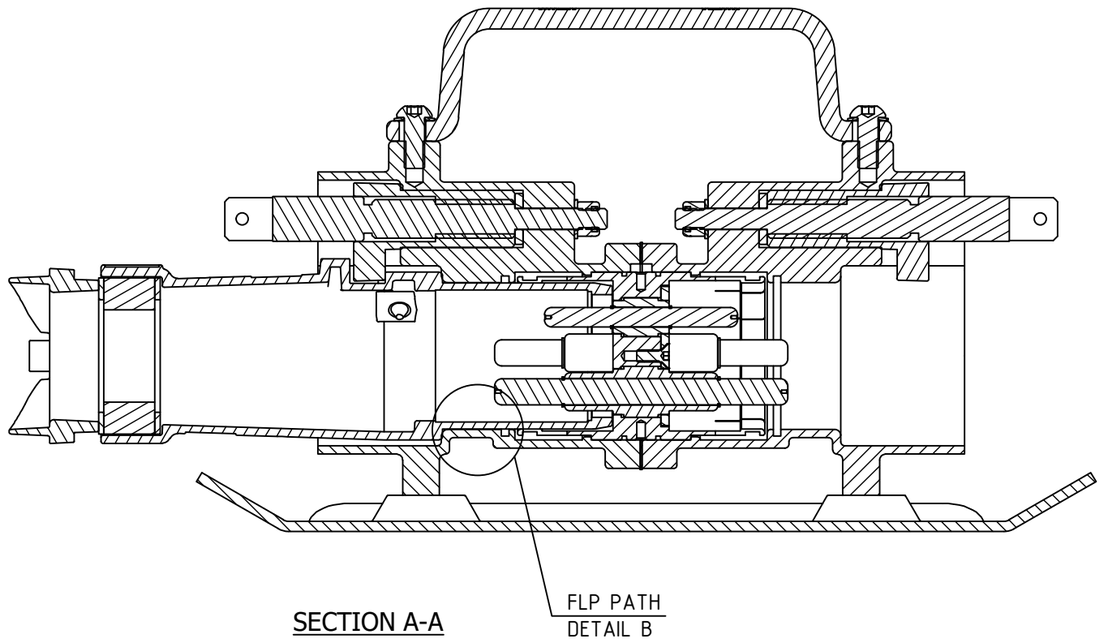

SECTION A-A

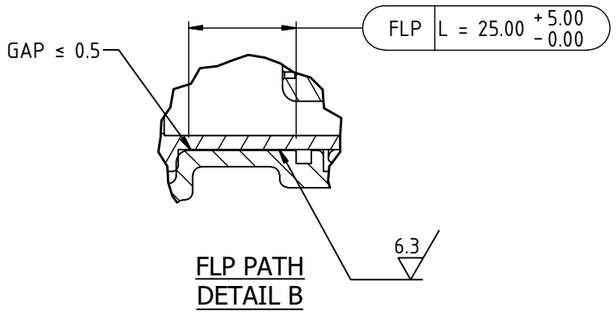

FLP PATH
DETAIL B

This drawing forms part of the documentation for
Certification: ANZEx 16.2005X Issue: 7
Alterations not authorised by Simtars may invalidate this certification.

AUSPROOF PTY LTD								
© COPYRIGHT RESERVED			DRAWN BY G.Coumessos					
DIMENSIONS (Metric-millimetre-mm) UNLESS OTHERWISE SPECIFIED	X.X 0.1		APPROVED BY C.Taylor	DRAWING NUMBER	PRODUCT NAME Plug And B2B Body	0	05/02/2019	D.Jensen	Updaed to IECEx Standards
ALL SURFACES TO UNLESS OTHERWISE NOTED	X.XX 0.05		SIZE A3	ExB2B150-C1101	Engaged CUSTOMER COPY	REVISION NUMBER	REVISION DATE	REVISION BY	REVISION DESCRIPTION

Ex

Ex

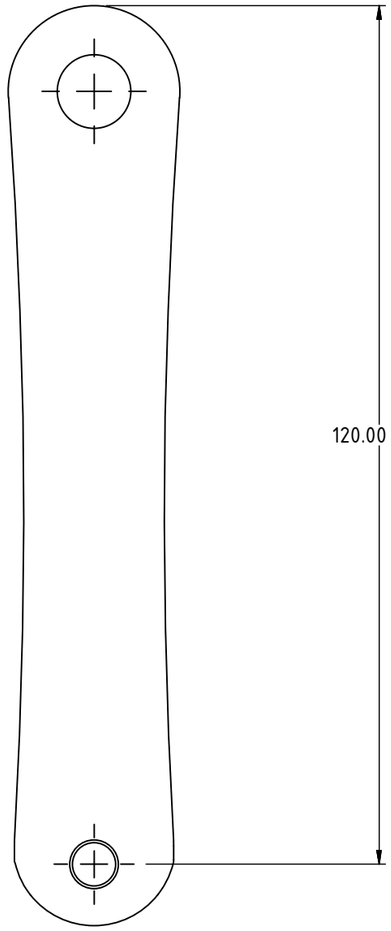

JACK IN HANDLE

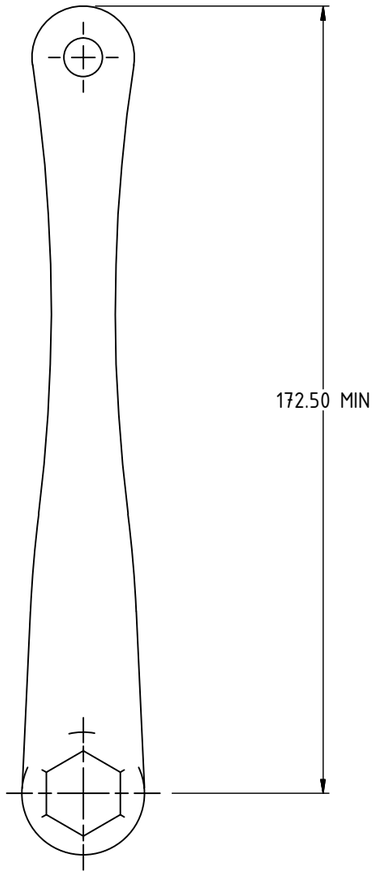

QUICK RELEASE HANDLE

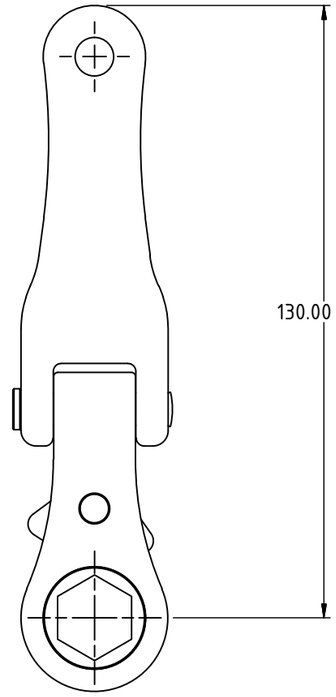

RATCHET RELEASE HANDLE

This drawing forms part of the documentation for
Certification: ANZEx 16.2005X Issue: 7
Alterations not authorised by Simtars may invalidate this certification.

AUSPROOF PTY LTD								
© COPYRIGHT RESERVED			DRAWN BY A.Castle					
DIMENSIONS (Metric-millimetre-mm) UNLESS OTHERWISE SPECIFIED	X.X 0.1 X.XX 0.05		APPROVED BY C.Taylor	DRAWING NUMBER ExB2B150-C1102	PRODUCT NAME Com 150 Operating Mech CUSTOMER COPY	0	06/10/2022	A.Castle	Added Operating Mechanism
ALL SURFACES TO UNLESS OTHERWISE NOTED			SIZE A3			REVISION NUMBER	REVISION DATE	REVISION BY	REVISION DESCRIPTION

Ex

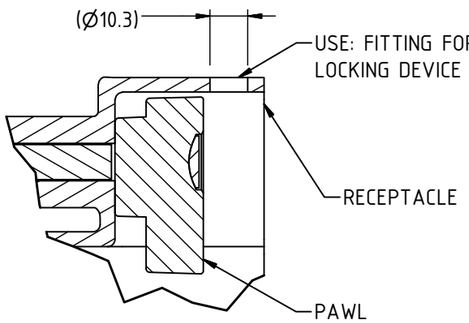

DETAIL FOR LOCKING DEVICE LOCATION

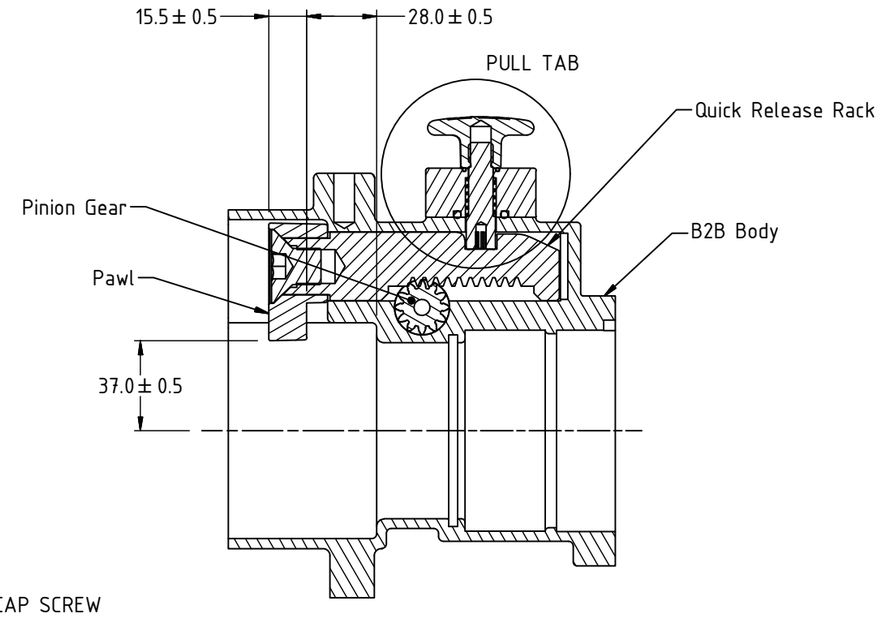

SECTION LG-LG

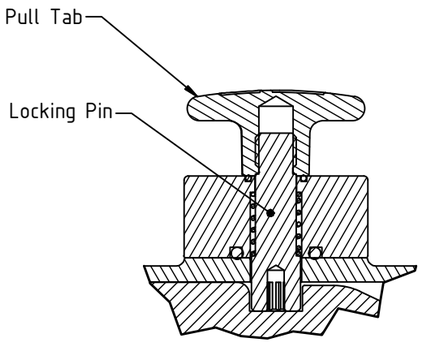

PULL TAB DETAIL

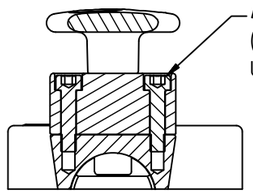

SECTION LJ-LJ

BACK TO BACK PRODUCT DATA LABEL
Refer to ExB2B150-C1307 Table 1.0

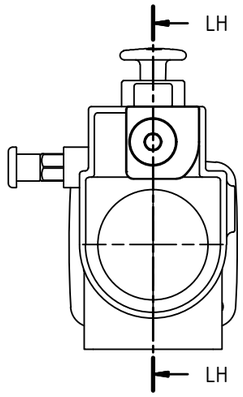

PAWL WITHDRAWN

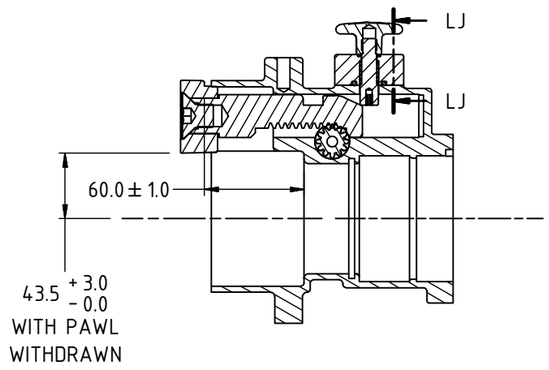

SECTION LH-LH

MODEL IDENTIFICATION CROSS REFERENCE TABLE
QUICK RELEASE TYPE BACK TO BACK
QRBB614
QRBB114

This drawing forms part of the documentation for Certification: ANZEx 16.2005X Issue: 7
Alterations not authorised by Simtars may invalidate this certification.

Ex

AUSPROOF PTY LTD

© COPYRIGHT RESERVED

DRAWN BY G.Coumessos								
DIMENSIONS (Metric-millimetre-mm) UNLESS OTHERWISE SPECIFIED	X.X 0.1 X.XX 0.05		APPROVED BY C.Taylor	DRAWING NUMBER ExB2B150-C1305	PRODUCT NAME COM 150 B2B Quick Release CUSTOMER COPY	0	05/02/2019	D.Jensen	Updaed to IECEx Standards
ALL SURFACES TO UNLESS OTHERWISE NOTED			SIZE A3			REVISION NUMBER	REVISION DATE	REVISION BY	REVISION DESCRIPTION

Ex

Ex

FASTENER SCHEDULE JACK IN

2 x M10x1.5 x 25 LONG Z/P BUTTON HEAD SOCKET CAP SCREWS (CLASS 12.9) (6g) ISO 7380
AND 2 x M10 S/S BELLEVILLE LOCK WASHER
USE: EARTH FIXING SCREWS FOR EARTH BRIDGE

2 x M10x1.5 Z/P NYLOC NUTS (CLASS 8) (6H) ISO 4017
AND 2 x M10 Z/P WASHER (CLASS 8) (200 HV) ISO 7089
USE: TO FIX PAWL SCREW INTO B2B BODY

4 x 4GAUGE x 1/4" Z/P HAMMER DRIVE
USE: FIXING LABEL TO B2B BODY

4 x M10x1.5 x 20 LONG Z/P SET SCREW (CLASS 4.6) (6g) ISO 4017
AND 4 x M10 B/S WASHER (CLASS 4) (200 HV) ISO 7089
USE: FIX BASE PLATE ONTO B2B BODY

4 x M10x1.5 x 25 LONG Z/P SOCKET HEAD CAP SCREWS (CLASS 12.9) (6g) ISO 4762
USE: TO FIX B2B BODIES TOGETHER

1 x M6x1.0 x 16 LONG Z/P COUNTERSUNK SOCKET HEAD SCREW (CLASS 12.9) (6g) ISO 10642
USE: TO FIX RETAINING PLATE TO CAGE

1 x M5x0.8 x 6 LONG Z/P BUTTON HEAD SOCKET CAP SCREWS (CLASS 12.9) (6g) ISO 7380
USE: FIX ROTATION OF CAGE

FASTENER SCHEDULE QUICK RELEASE

2 x M10x1.5 x 25 LONG Z/P BUTTON HEAD SOCKET CAP SCREWS (CLASS 12.9) (6g) ISO 7380
AND 2 x M10 S/S BELLEVILLE LOCK WASHER
USE: EARTH FIXING SCREWS FOR EARTH BRIDGE

4 x 4GAUGE x 1/4" Z/P HAMMER DRIVE
USE: FIXING LABEL TO B2B BODY

4 x M10x1.5 x 20 LONG Z/P SET SCREW (CLASS 4.6) (6g) ISO 4017
AND 4 x M10 B/S WASHER (CLASS 4) (200 HV) ISO 7089
USE: FIX BASE PLATE ONTO B2B BODY

4 x M10x1.5 x 25 LONG Z/P SOCKET HEAD CAP SCREWS (CLASS 12.9) (6g) ISO 4762
USE: TO FIX B2B BODIES TOGETHER

1 x M6x1.0 x 16 LONG Z/P COUNTERSUNK SOCKET HEAD SCREW (CLASS 12.9) (6g) ISO 10642
USE: TO FIX RETAINING PLATE TO CAGE

1 x M5x0.8 x 6 LONG Z/P BUTTON HEAD SOCKET CAP SCREWS (CLASS 12.9) (6g) ISO 7380
USE: FIX ROTATION OF CAGE

2 x M16x2.0 x 20 LONG Z/P COUNTERSUNK SOCKET HEAD SCREW (CLASS 12.9) (6g) ISO 10642
USE: FIX PAWL TO QR RACK

2 x M8x1.25 x 16 LONG Z/P COUNTERSUNK SOCKET HEAD SCREW (CLASS 12.9) (6g) ISO 10642
USE: TO FIX PINION RETAINING BOSS TO PINION

2 x M8x1.25 x 35 LONG Z/P COUNTERSUNK SOCKET HEAD SCREW (CLASS 12.9) (6g) ISO 10642
USE: TO FIX QR HANDLE TO QR RACK

8 x M5x1.25 x 20 LONG Z/P SOCKET HEAD CAP SCREWS (CLASS 12.9) (6g) ISO 4762
USE: TO FIX LOCKING PIN HOUSING TO B2B BODY

THREAD CLASS TO ISO 965
COARSE THREAD PITCH TO ISO 262

This drawing forms part of the documentation for
Certification: ANZEx 16.2005X Issue: 7
Alterations not authorised by Simtars may invalidate this certification.

AUSPROOF PTY LTD

© COPYRIGHT RESERVED

DRAWN BY G.Coumessos								
DIMENSIONS (Metric-millimetre-mm) UNLESS OTHERWISE SPECIFIED	X.X 0.1 X.XX 0.05	APPROVED BY C.Taylor	DRAWING NUMBER ExB2B150-C1306	PRODUCT NAME FASTENER SCHEDULE CUSTOMER COPY	0	05/02/2019	D.Jensen	Updaed to IECEx Standards
ALL SURFACES TO UNLESS OTHERWISE NOTED		SIZE A3			REVISION NUMBER	REVISION DATE	REVISION BY	REVISION DESCRIPTION

Ex

Ex

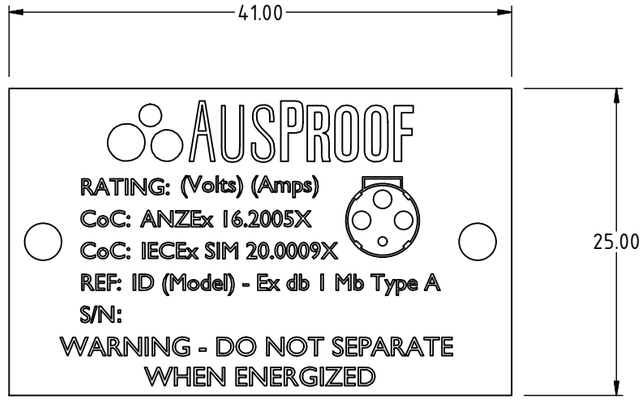

BACK TO BACK PRODUCT DATA LABEL
AS PER TABLE 1.0

Table 1.0		
Model	Volts	Amps
BB614	660	150
QRBB614	660	150
BB114	1100	150
QRBB114	1100	150

This drawing forms part of the documentation for
Certification: ANZEx 16.2005X Issue: 7
Alterations not authorised by Simtars may invalidate this certification.

AUSPROOF PTY LTD

© COPYRIGHT RESERVED

DIMENSIONS (Metric-millimetre-mm) UNLESS OTHERWISE SPECIFIED ALL SURFACES TO UNLESS OTHERWISE NOTED	X.X 0.1 X.XX 0.05		DRAWN BY C.Taylor APPROVED BY L.Richards SIZE A3	DRAWING NUMBER ExB2B150-C1307	PRODUCT NAME Product marking labels CUSTOMER COPY	0 REVISION NUMBER	05/02/2019 REVISION DATE	D.Jensen REVISION BY	Updaed to IECEx Standards REVISION DESCRIPTION

Ex

Ex

1 x M10x1.5 x 25 Z/P BHCS PN1824 (MIN Class 8.8) (6g) ISO 7380 OR A2/A4-70 STAINLESS STEEL PN10147
AND 1 x 3/8 x 1" Z/P WASHER PN1941 (Min Class 5) (140 HV) ISO 7089 OR A2/A4-70 STAINLESS STEEL PN10152
USE: TO FIX RATCHET RELEASE

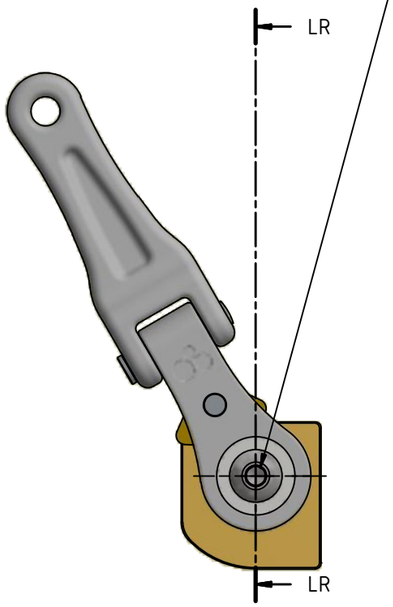

FRONT VIEW

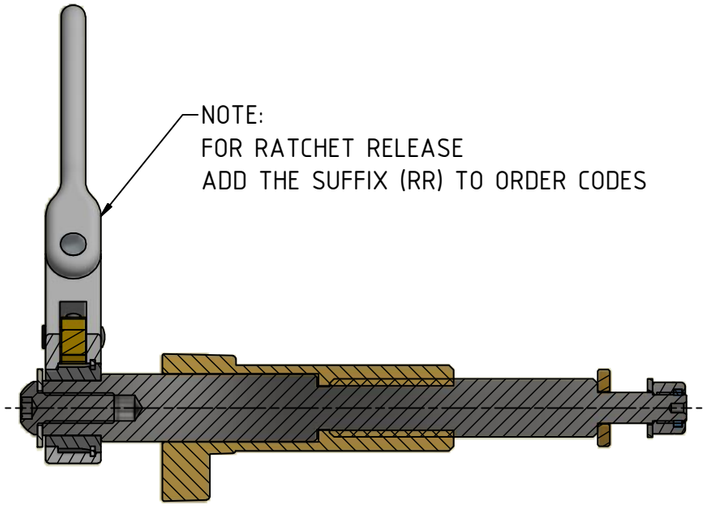

SECTION LR-LR

MODEL IDENTIFICATION CROSS REFERENCE TABLE
BACK TO BACK TYPE
BB614RR
BB114RR

1 x M8x1.25 x 20 Z/P SHCS PN10119 (MIN Class 8.8) (6g) ISO 4762 OR A2/A4-70 STAINLESS STEEL PN:1077
USE: TO FIX RATCHET RELEASE

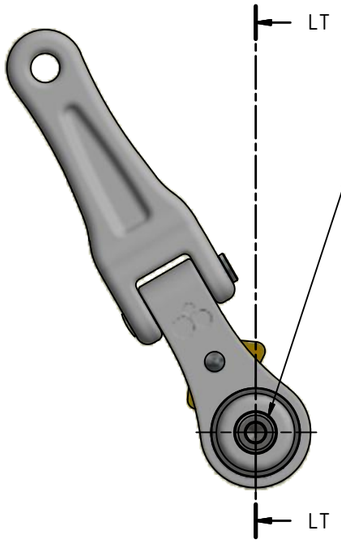

FRONT VIEW

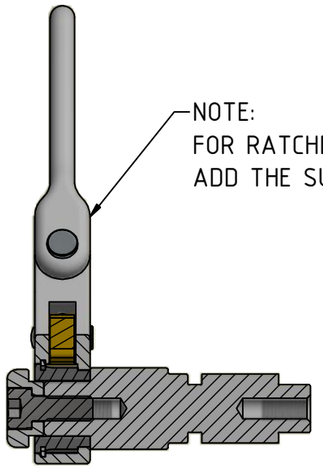

SECTION LT-LT

MODEL IDENTIFICATION CROSS REFERENCE TABLE
QUICK RELEASE BACK TO BACK TYPE
QRBB614RR
QRBB114RR

This drawing forms part of the documentation for
Certification: ANZEx 16.2005X Issue: 7
Alterations not authorised by Simtars may invalidate this certification.

AUSPROOF PTY LTD

© COPYRIGHT RESERVED

DIMENSIONS (Metric-millimetre-mm) UNLESS OTHERWISE SPECIFIED ALL SURFACES TO UNLESS OTHERWISE NOTED	X.X 0.1 X.XX 0.05		DRAWN BY C.Taylor APPROVED BY D.Jensen SIZE A3	DRAWING NUMBER ExB2B150-C1308	PRODUCT NAME Common 150 B2B RR CUSTOMER COPY	0 REVISION NUMBER	12/12/2024 REVISION DATE	C.Taylor REVISION BY	FIXED FASTENER ISO REVISION DESCRIPTION

Ex

Ex

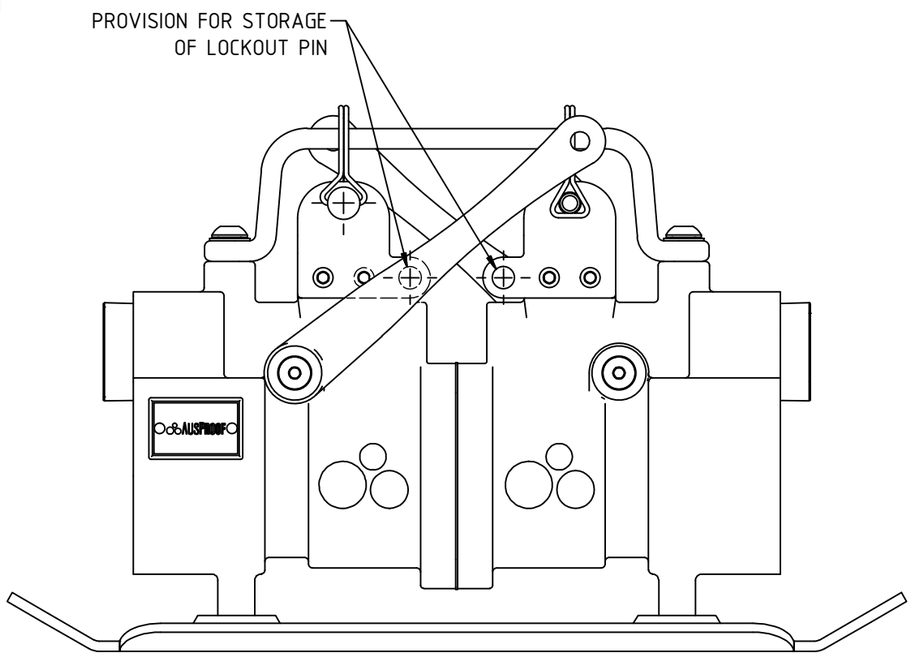

SIDE VIEW

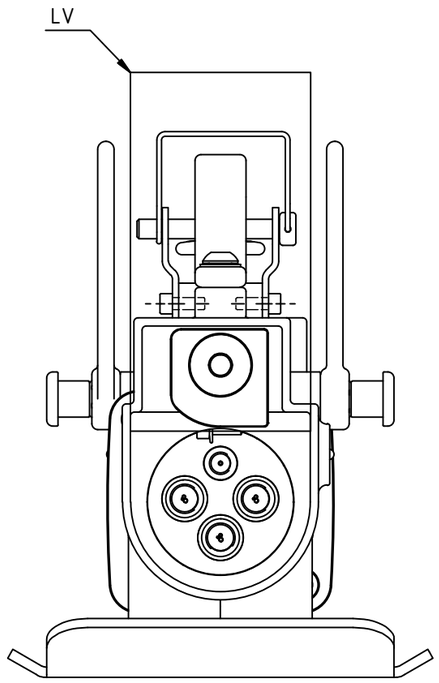

FRONT VIEW

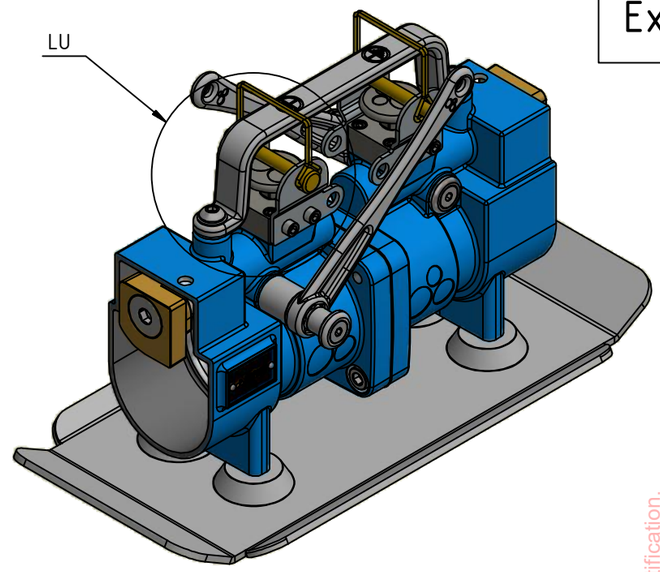

ISOMETRIC VIEW

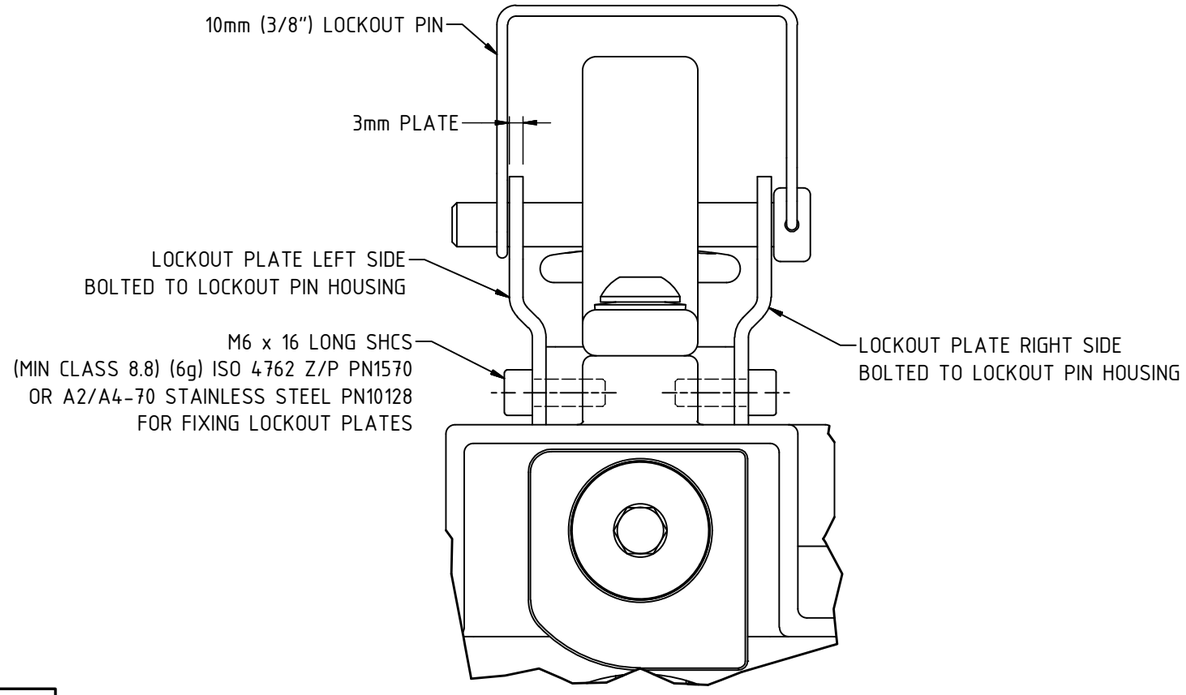

DETAIL LV

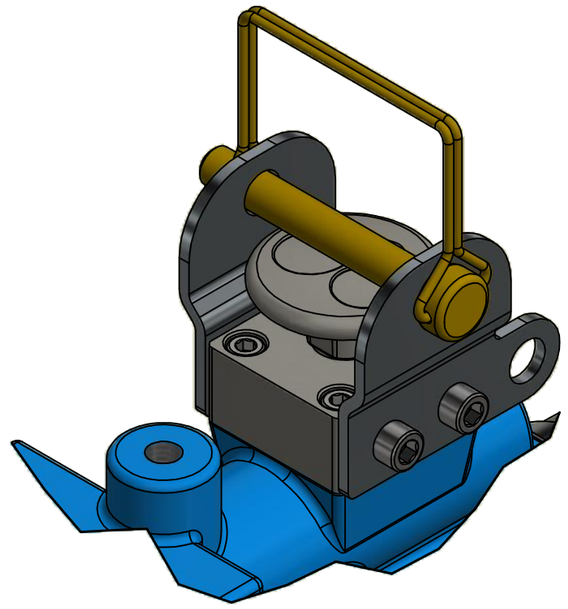

DETAIL LU
WITH EARTH BRIDGE AND RACKING
HANDLES REMOVED FOR CLARITY
SIMILAR FOR BOTH RECEPTICALES

This drawing forms part of the documentation for
Certification: ANZEx 16.2005X Issue: 7
Alterations not authorised by Simtars may invalidate this certification.

AUSPROOF PTY LTD

© COPYRIGHT RESERVED

DIMENSIONS (Metric-millimetre-mm) UNLESS OTHERWISE SPECIFIED ALL SURFACES TO UNLESS OTHERWISE NOTED	X.X 0.1 X.XX 0.05		DRAWN BY D.Jensen APPROVED BY C.Taylor SIZE A3	DRAWING NUMBER ExB2B150-C1309	PRODUCT NAME 150 B2B Pin Lockout CUSTOMER COPY	0 REVISION NUMBER	22/03/2022 REVISION DATE	D.Jensen REVISION BY	INITIAL RELEASE REVISION DESCRIPTION

Ex

Ex

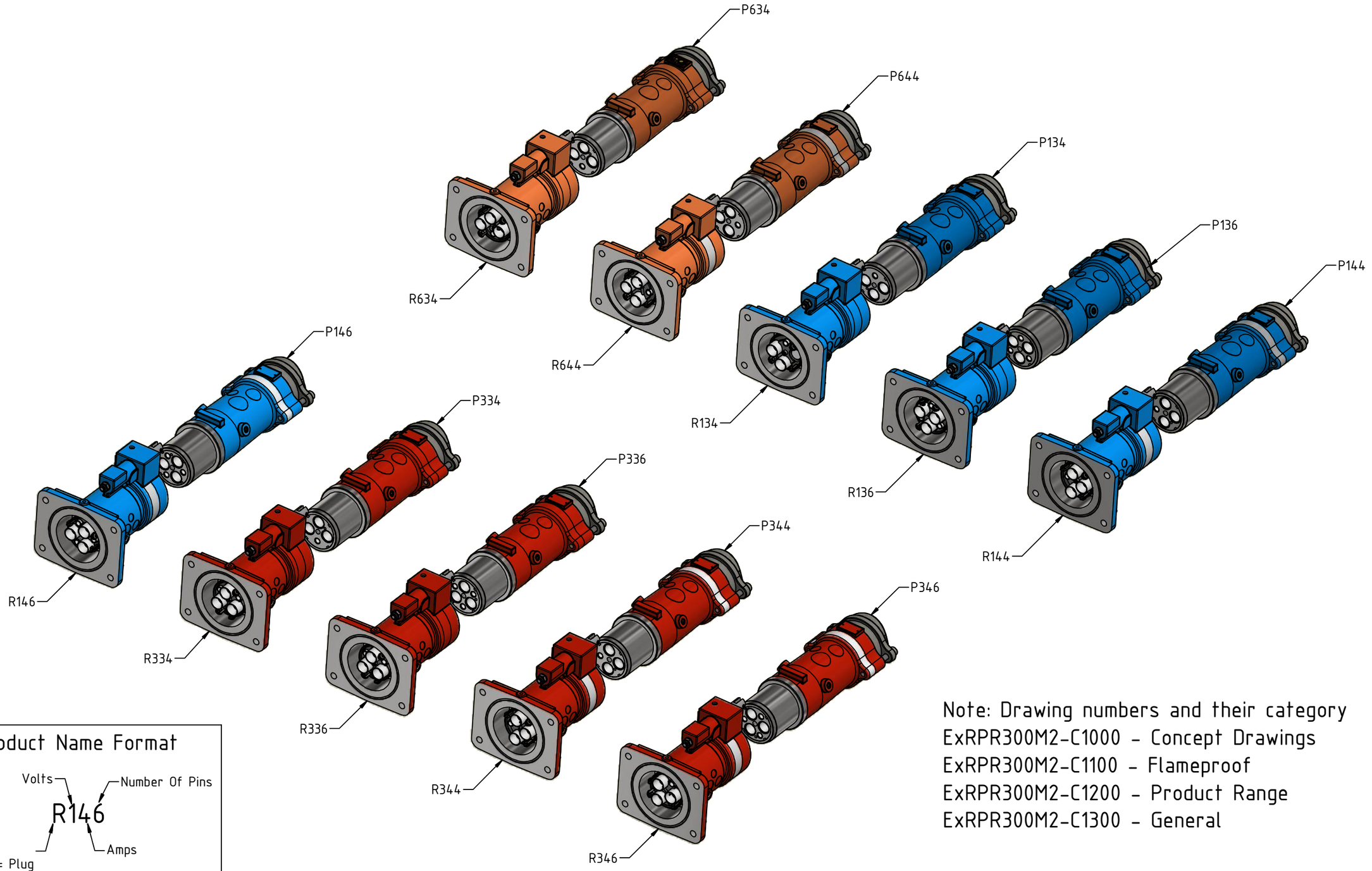

Product Name Format

Volts — Number Of Pins

R146

Amps

P = Plug
R = Receptacle

Note: Drawing numbers and their category
ExRPR300M2-C1000 - Concept Drawings
ExRPR300M2-C1100 - Flameproof
ExRPR300M2-C1200 - Product Range
ExRPR300M2-C1300 - General

This drawing forms part of the documentation for
Certification: ANZEx 16.2005X Issue: 7
Alterations not authorised by Simtars may invalidate this certification.

AUSPROOF PTY LTD

© COPYRIGHT RESERVED

DIMENSIONS (Metric-millimetre-mm) UNLESS OTHERWISE SPECIFIED ALL SURFACES TO UNLESS OTHERWISE NOTED	X.X 0.1 X.XX 0.05		DRAWN BY G.Coumessos APPROVED BY C.Taylor SIZE A3	DRAWING NUMBER ExRPR300M2-C1000	PRODUCT NAME 300 Series Index CUSTOMER COPY	1 REVISION NUMBER	07/10/2020 REVISION DATE	D.Jensen REVISION BY	Updated to IECEx Standards REVISION DESCRIPTION

Ex

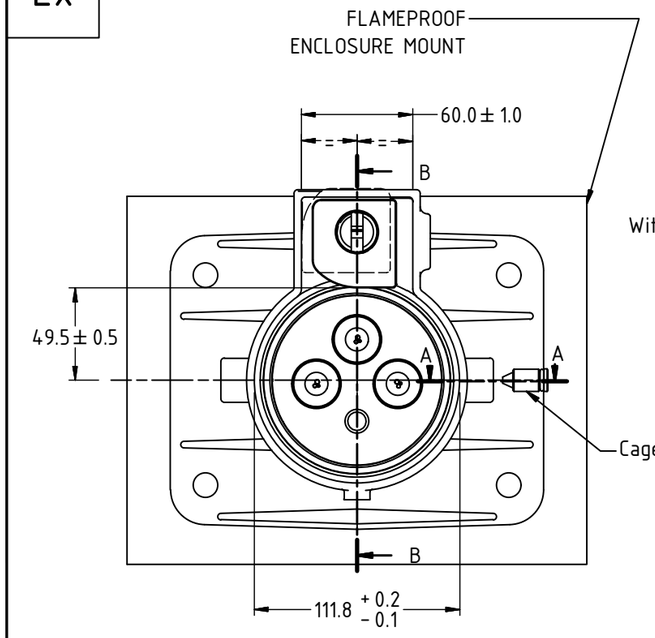

FRONT VIEW

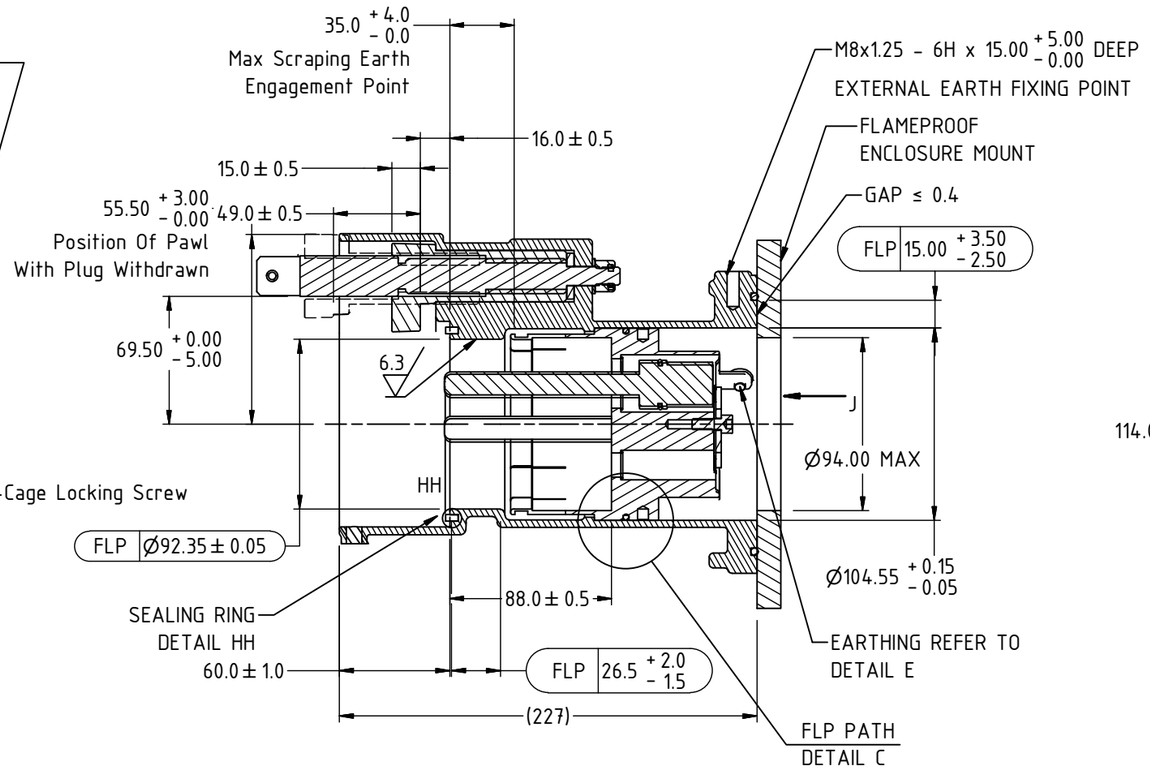

FLAME PATH SECTION B-B
TYPICAL FOR 4 PIN AND 6 PIN MODELS

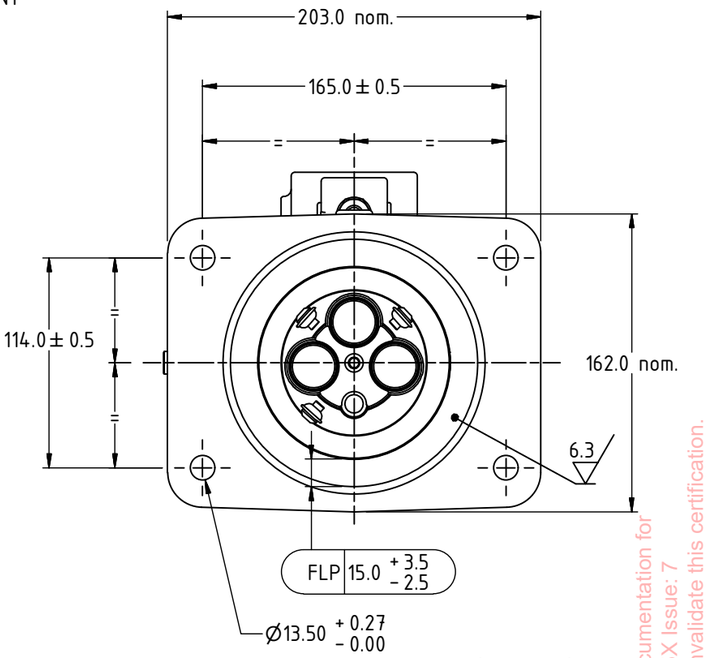

REAR FLANGE FLAMEPATH DETAIL J

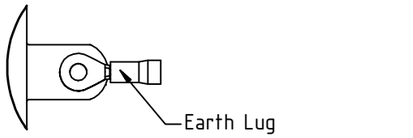

DETAIL E

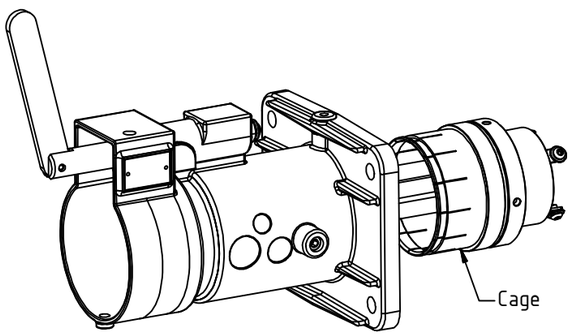

ASSEMBLY

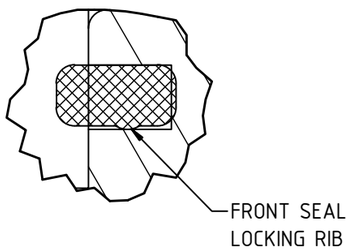

DETAIL HH

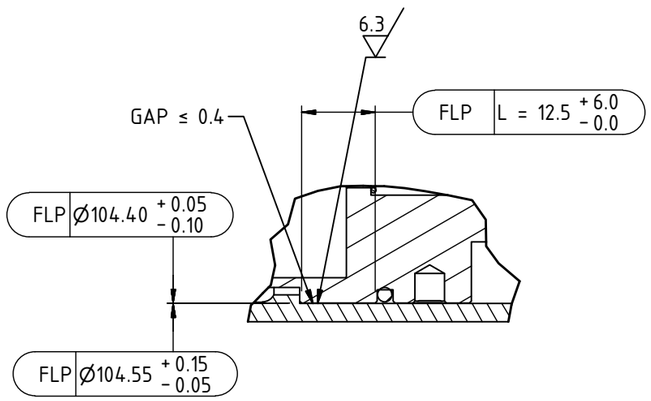

FLAME PATH DETAIL C

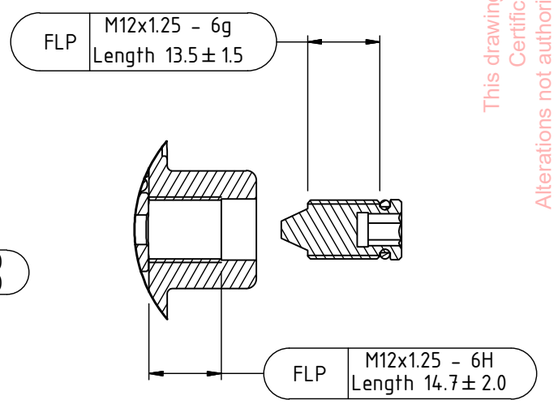

CAGE LOCKING SCREW
FLAME PATH SECTION A-A

This drawing forms part of the documentation for Certification: ANZEx 16.2005X Issue: 7
Alterations not authorised by Simtars may invalidate this certification.

Ex

AUSPROOF PTY LTD								
© COPYRIGHT RESERVED			DRAWN BY G.Coumessos					
DIMENSIONS (Metric-millimetre-mm) UNLESS OTHERWISE SPECIFIED	X.X 0.1		APPROVED BY C.Taylor	DRAWING NUMBER	PRODUCT NAME	1	07/10/2020	D.Jensen	Updated to IECEx Standards
ALL SURFACES TO UNLESS OTHERWISE NOTED	X.XX 0.05		SIZE A3	ExRPR300M2-C1100	Common 300 Receptacle Body CUSTOMER COPY	REVISION NUMBER	REVISION DATE	REVISION BY	REVISION DESCRIPTION

Ex

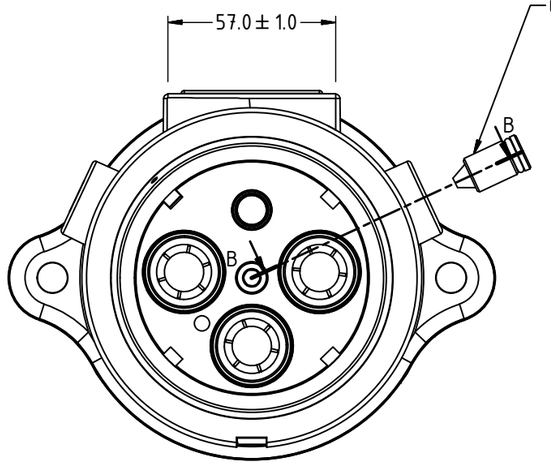

TOP VIEW

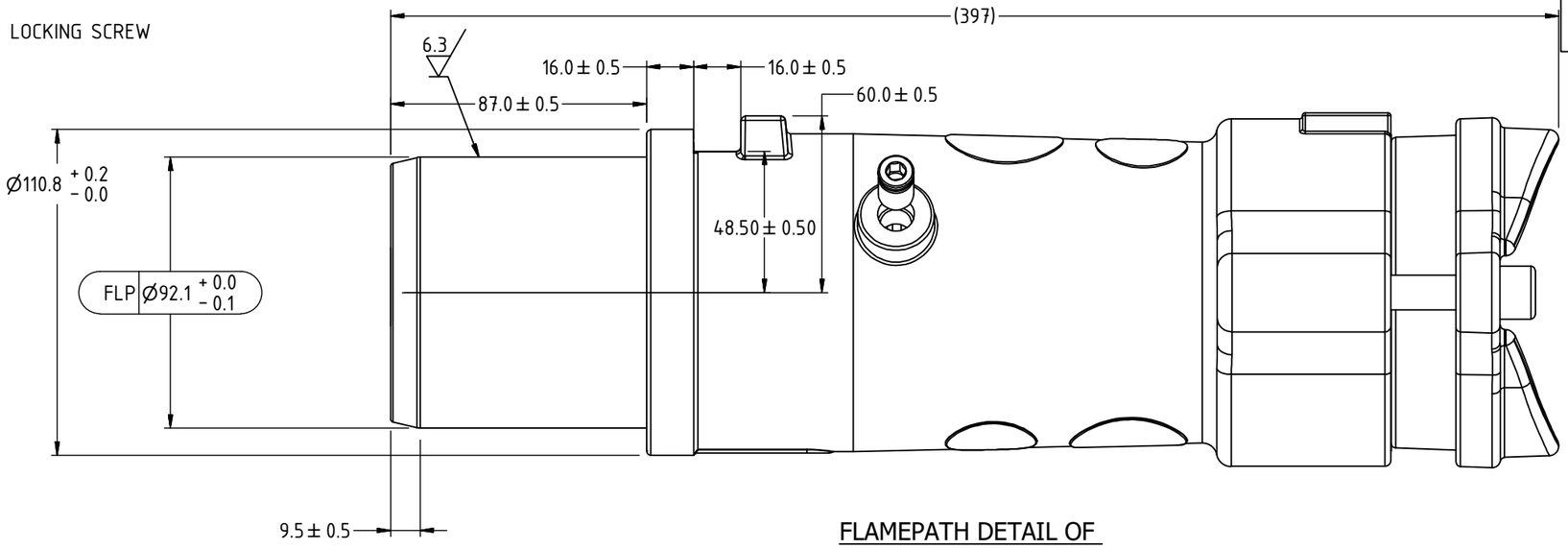

FLAMEPATH DETAIL OF
PLUG BODY

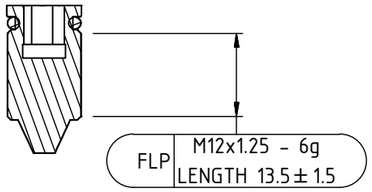

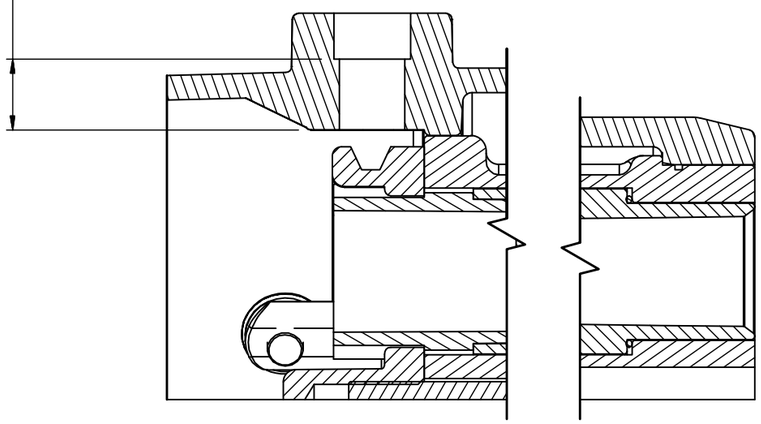

CAGE LOCKING SCREW
FLAMEPROOF PATH
TYP FOR 4&6 PIN MODELS
SECTION B-B

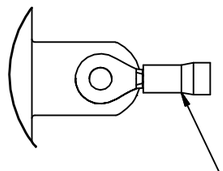

DETAIL E

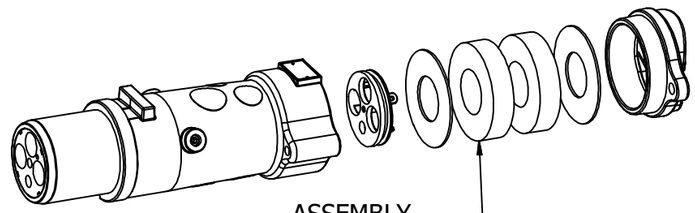

ASSEMBLY

Refer to drawings for Gland details:
ExRPR300M2-C1303

Ex

This drawing forms part of the documentation for
Certification: ANZEx 16.2005X Issue: 7
Alterations not authorised by Simtars may invalidate this certification.

AUSPROOF PTY LTD								
© COPYRIGHT RESERVED			DRAWN BY G.Coumessos					
DIMENSIONS (Metric-millimetre-mm) UNLESS OTHERWISE SPECIFIED	X.X 0.1		APPROVED BY C.Taylor	DRAWING NUMBER	PRODUCT NAME	2	08/01/2025	D.Jensen	Refer to drawings for Gland details: ExRPR300M2-C1303
ALL SURFACES TO UNLESS OTHERWISE NOTED	X.XX 0.05		SIZE A3	ExRPR300M2-C1101	Common 300 Plug Body CUSTOMER COPY	REVISION NUMBER	REVISION DATE	REVISION BY	REVISION DESCRIPTION

Ex

Ex

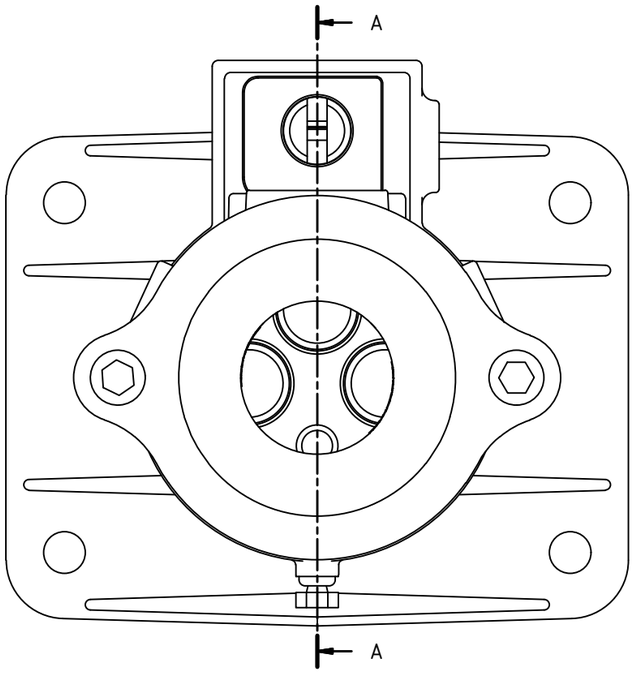

PLUG RECEPTACLE COUPLING
END VIEW

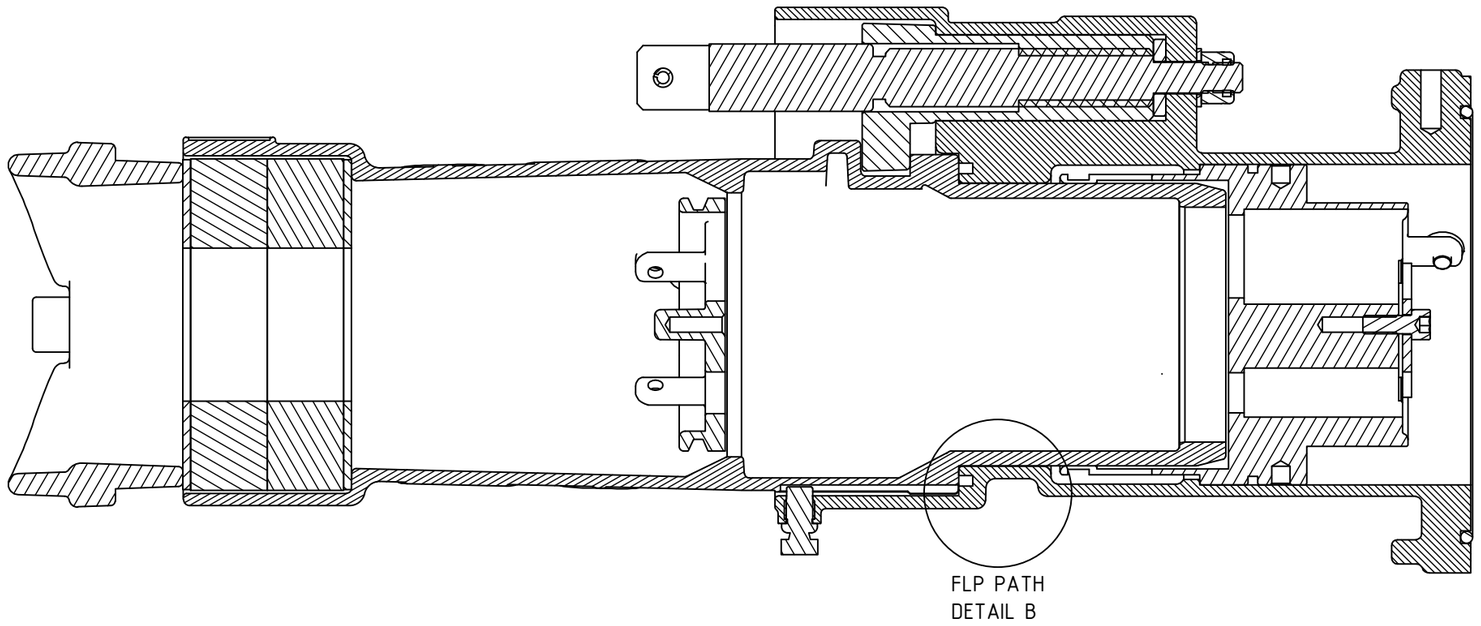

SECTION A-A

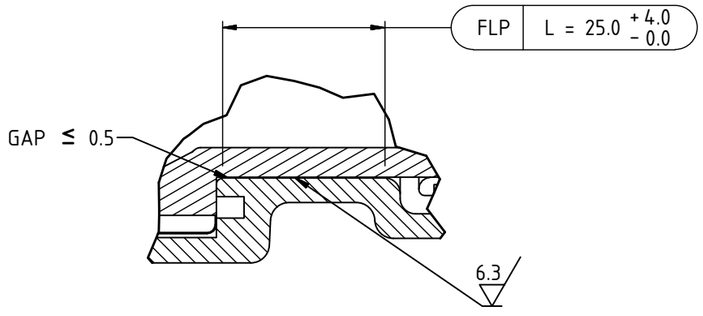

DETAIL B

This drawing forms part of the documentation for
Certification: ANZEx 16.2005X Issue: 7
Alterations not authorised by Simtars may invalidate this certification.

AUSPROOF PTY LTD

© COPYRIGHT RESERVED

DIMENSIONS (Metric-millimetre-mm) UNLESS OTHERWISE SPECIFIED ALL SURFACES TO UNLESS OTHERWISE NOTED	X.X 0.1 X.XX 0.05		DRAWN BY G.Coumessos APPROVED BY C.Taylor SIZE A3	DRAWING NUMBER ExRPR300M2-C1102	PRODUCT NAME 300 Plug & Receptacle Engaged CUSTOMER COPY	1 REVISION NUMBER	07/10/2020 REVISION DATE	D.Jensen REVISION BY	Updated to IECEx Standards REVISION DESCRIPTION

Ex

RECEPTACLE CONTACT/INSULATOR/4-PIN CAGE ASSEMBLY
FLAME PROOF PATHS

Ex

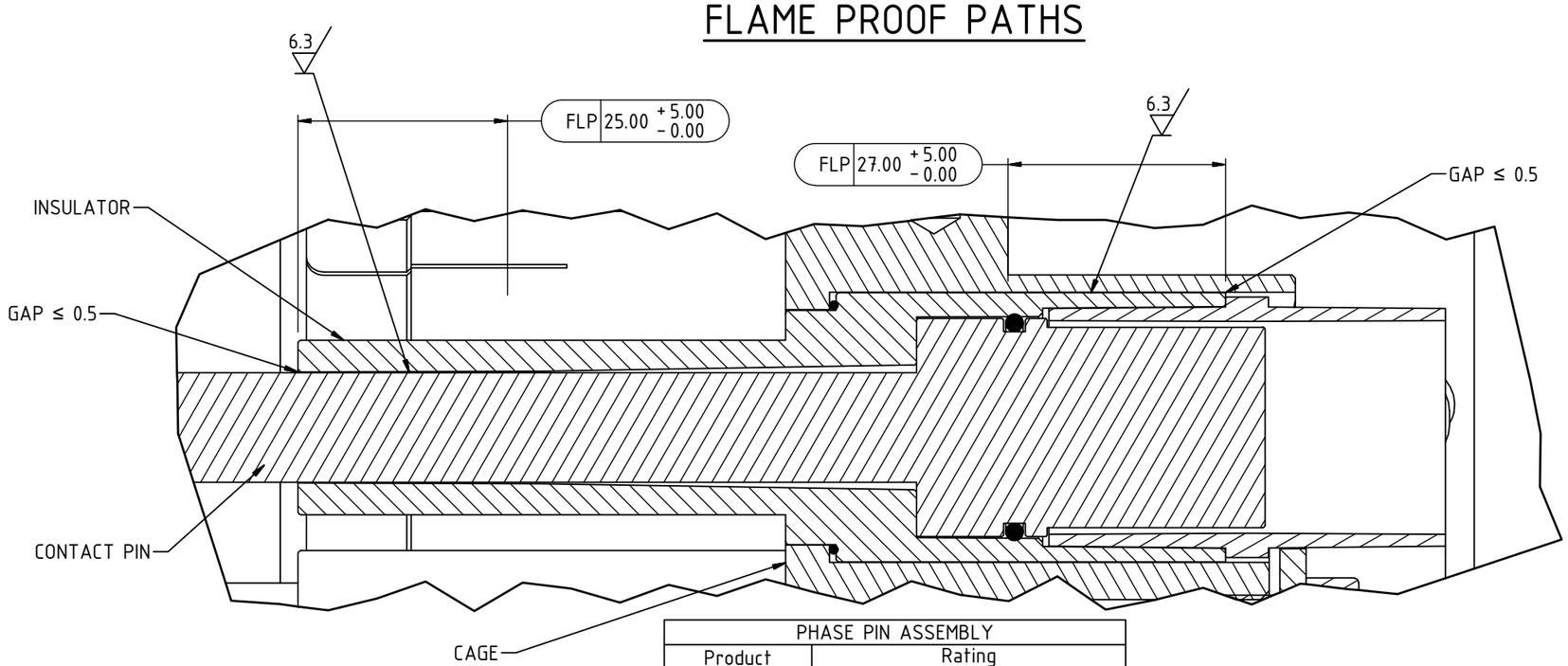

PHASE PIN ASSEMBLY	
Product	Rating
R334	3300V/300A

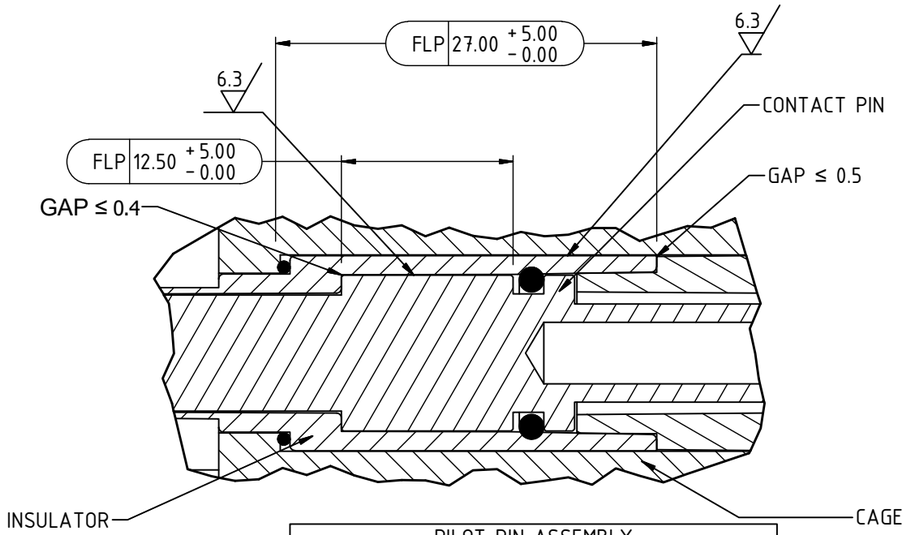

PILOT PIN ASSEMBLY	
Product	Rating
R334	3300V/300A
R134	1100V/300A
R344	3300V/425A
R144	1100V/425A
R634	660V/300A
R644	660V/425A

This drawing forms part of the documentation for
Certification: ANZEx 16.2005X Issue: 7
Alterations not authorised by Simtars may invalidate this certification.

AUSPROOF PTY LTD

© COPYRIGHT RESERVED

DRAWN BY G.Coumessos								
DIMENSIONS (Metric-millimetre-mm) UNLESS OTHERWISE SPECIFIED	X.X 0.1 X.XX 0.05		APPROVED BY C.Taylor	DRAWING NUMBER	PRODUCT NAME	1	07/10/2020	D.Jensen	Updated to IECEx Standards
ALL SURFACES TO UNLESS OTHERWISE NOTED			SIZE A3	ExRPR300M2-C1103	300 FLAME PATH SPECIFICATIONS CUSTOMER COPY	REVISION NUMBER	REVISION DATE	REVISION BY	REVISION DESCRIPTION

Ex

RECEPTACLE CONTACT/INSULATOR/4-PIN CAGE ASSEMBLY
FLAME PROOF PATHS

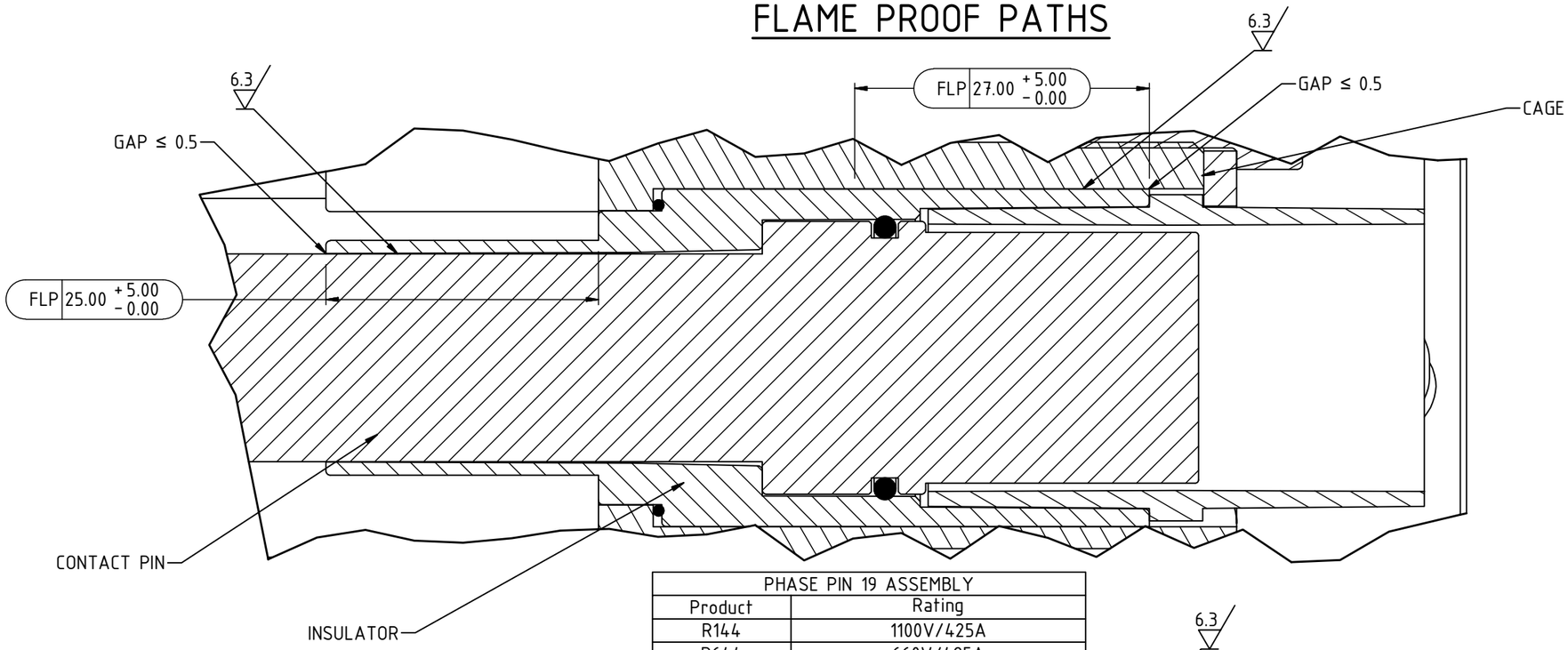

PHASE PIN 19 ASSEMBLY	
Product	Rating
R144	1100V/425A
R644	660V/425A

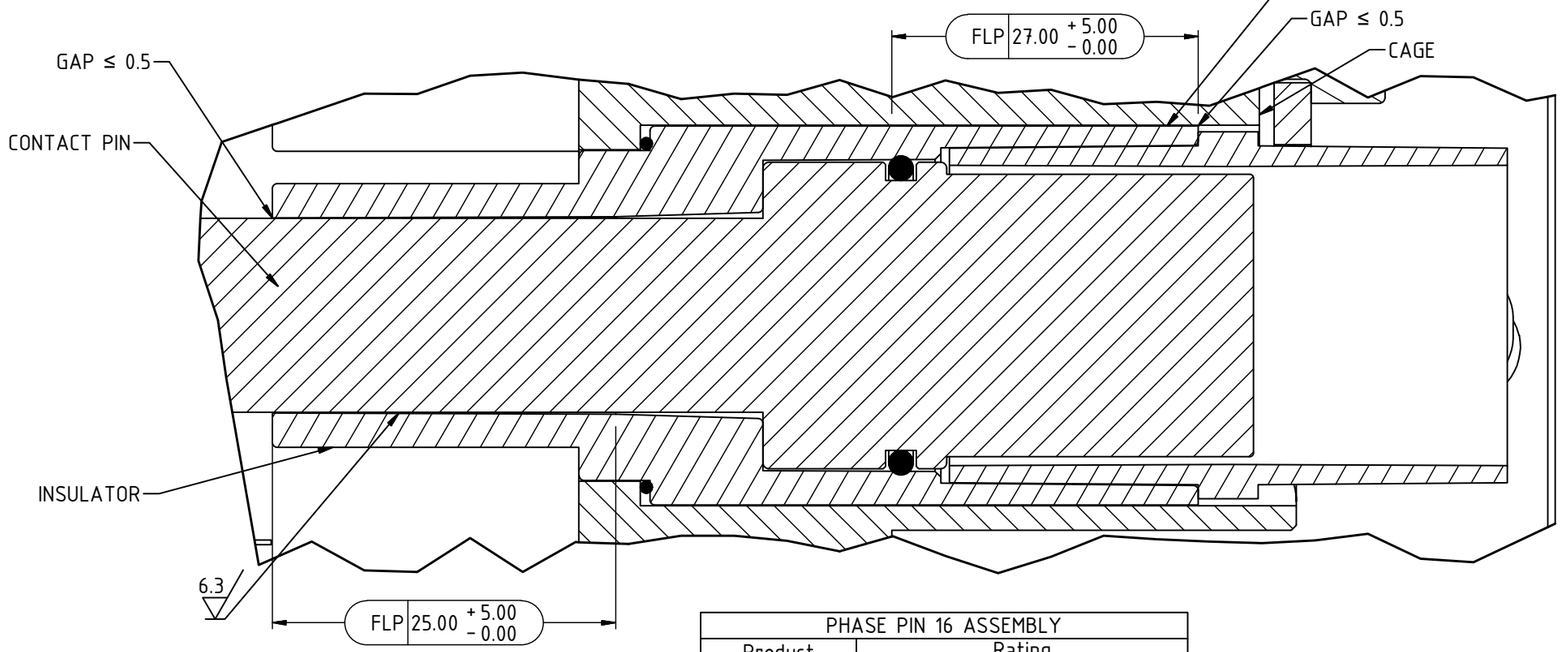

PHASE PIN 16 ASSEMBLY	
Product	Rating
R134	1100V/300A
R634	660V/300A
R344	3300V/425A

Ex

This drawing forms part of the documentation for Certification: ANZEx 16.2005X Issue: 7
Alterations not authorised by Simtars may invalidate this certification.

AUSPROOF PTY LTD

© COPYRIGHT RESERVED

DRAWN BY: G.Coumessos
APPROVED BY: C.Taylor
SIZE: A3

DIMENSIONS (Metric-millimetre-mm) UNLESS OTHERWISE SPECIFIED
X.X 0.1
X.XX 0.05
ALL SURFACES TO UNLESS OTHERWISE NOTED

DRAWING NUMBER: ExRPR300M2-C1104
PRODUCT NAME: 300 FLAME PATH SPECIFICATIONS CUSTOMER COPY

REVISION NUMBER	REVISION DATE	REVISION BY	REVISION DESCRIPTION
1	07/10/2020	D.Jensen	Updated to IECEx Standards

Ex

RECEPTACLE CONTACT/INSULATOR/6-PIN CAGE ASSEMBLY
FLAME PROOF PATHS

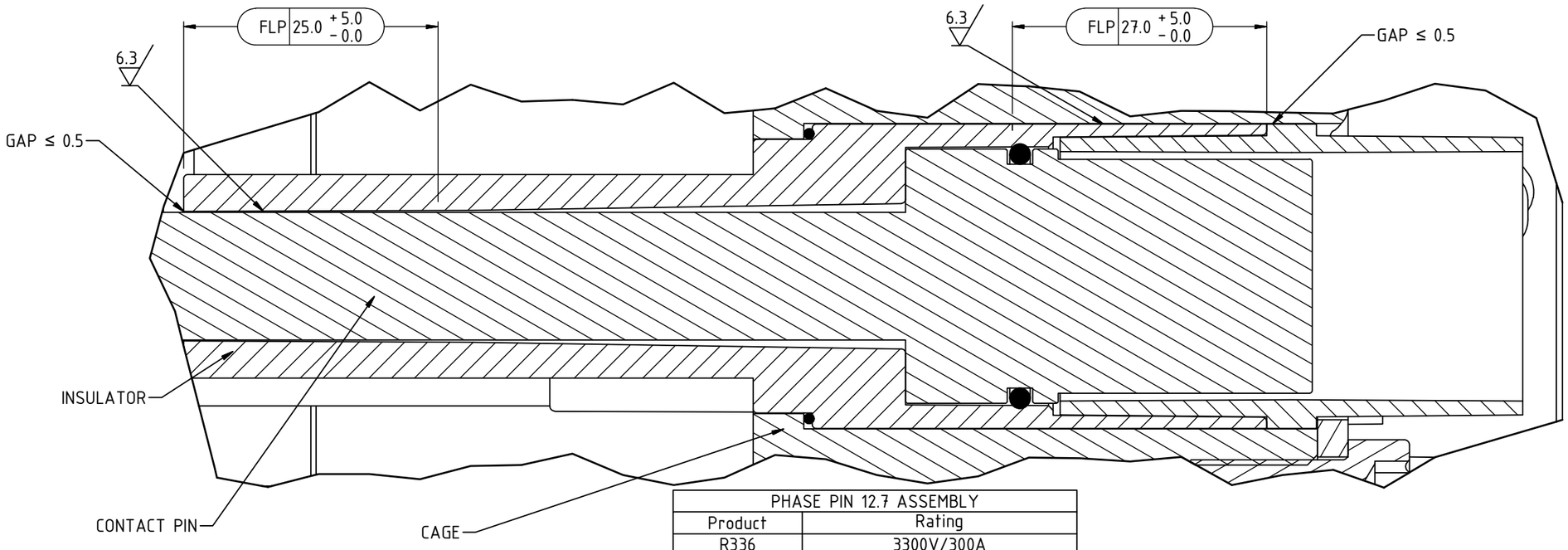

PHASE PIN 12.7 ASSEMBLY	
Product	Rating
R336	3300V/300A
R136	1100V/300A

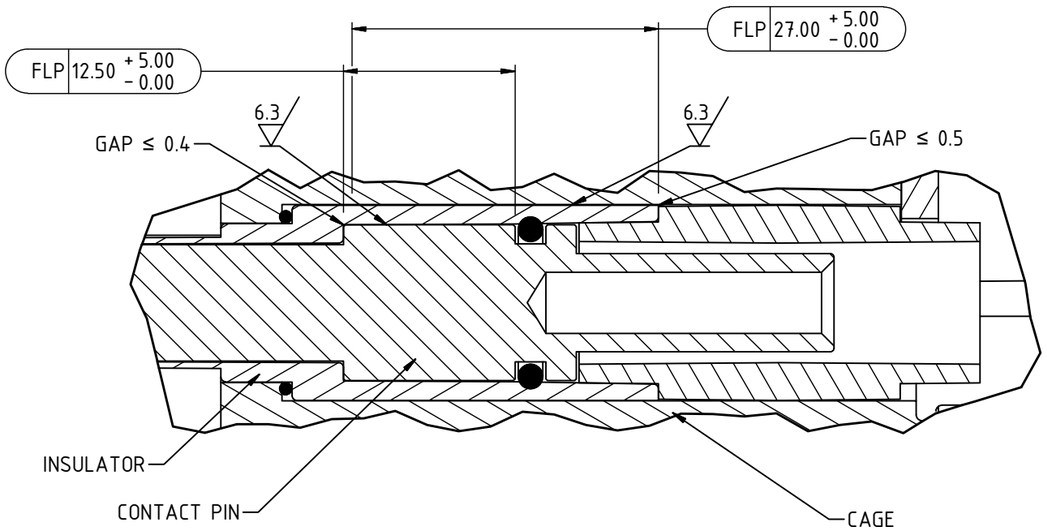

PILOT PIN ASSEMBLY	
Product	Rating
R336	3300V/300A
R136	1100V/300A
R346	3300V/425A
R146	1100V/425A

Ex

This drawing forms part of the documentation for Certification: ANZEx 16.2005X Issue: 7
Alterations not authorised by Simtars may invalidate this certification.

AUSPROOF PTY LTD

© COPYRIGHT RESERVED

DRAWN BY: G.Coumessos
APPROVED BY: C.Taylor
SIZE: A3

DIMENSIONS (Metric-millimetre-mm) UNLESS OTHERWISE SPECIFIED
ALL SURFACES TO UNLESS OTHERWISE NOTED
X.X 0.1
X.XX 0.05

DRAWING NUMBER: ExRPR300M2-C1105
PRODUCT NAME: 300 FLAME PATH SPECIFICATIONS CUSTOMER COPY

REVISION NUMBER	REVISION DATE	REVISION BY	REVISION DESCRIPTION
1	07/10/2020	D.Jensen	Updated to IECEx Standards

Ex

RECEPTACLE CONTACT/INSULATOR/6-PIN CAGE ASSEMBLY
FLAME PROOF PATHS

Ex

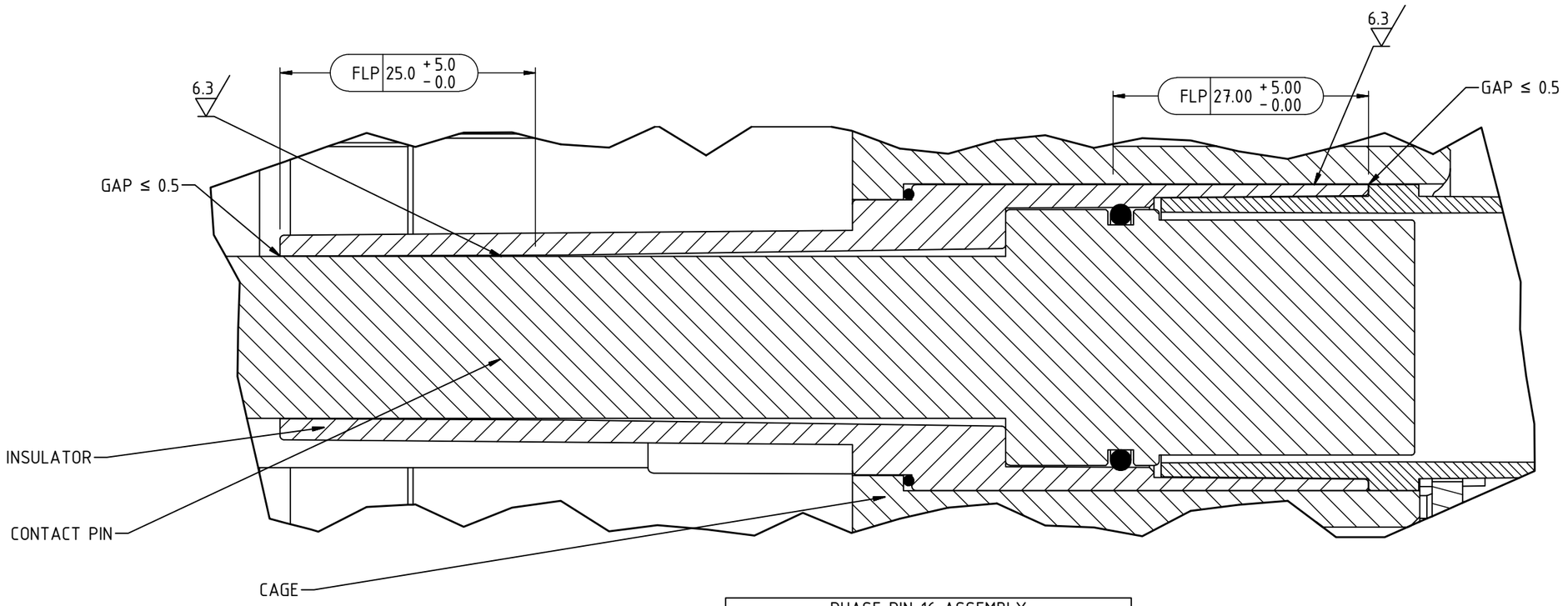

PHASE PIN 16 ASSEMBLY	
Product	Rating
R346	3300V/425A
R146	1100V/425A

This drawing forms part of the documentation for
Certification: ANZEx 16.2005X Issue: 7
Alterations not authorised by Simtars may invalidate this certification.

AUSPROOF PTY LTD

© COPYRIGHT RESERVED

DRAWN BY G.Coumessos								
DIMENSIONS (Metric-millimetre-mm) UNLESS OTHERWISE SPECIFIED	X.X 0.1 X.XX 0.05		APPROVED BY C.Taylor	DRAWING NUMBER	PRODUCT NAME	1	07/10/2020	D.Jensen	Updated to IECEx Standards
ALL SURFACES TO UNLESS OTHERWISE NOTED			SIZE A3	ExRPR300M2-C1106	300 FLAME PATH SPECIFICATIONS CUSTOMER COPY	REVISION NUMBER	REVISION DATE	REVISION BY	REVISION DESCRIPTION

Ex

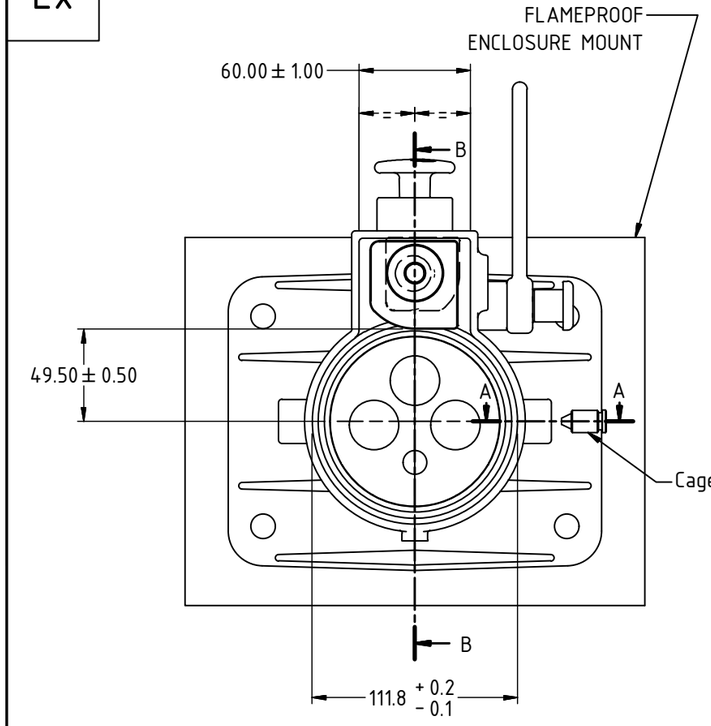

FRONT VIEW

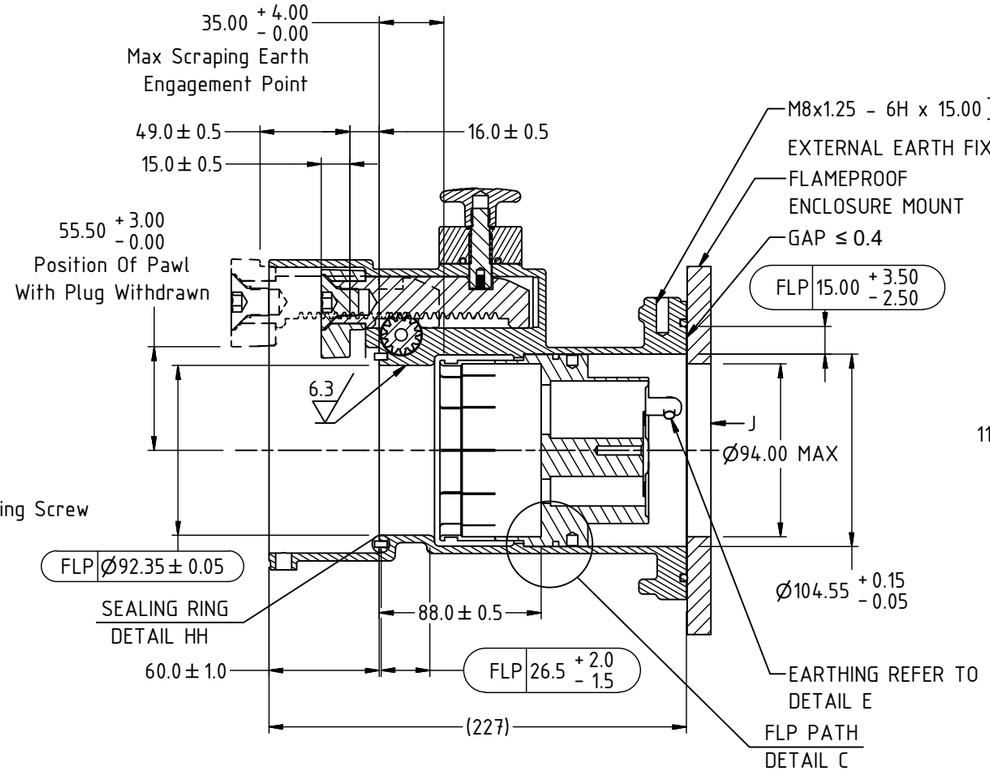

FLAMEPATH SECTION B-B
TYPICAL FOR 4 PIN AND 6 PIN MODELS

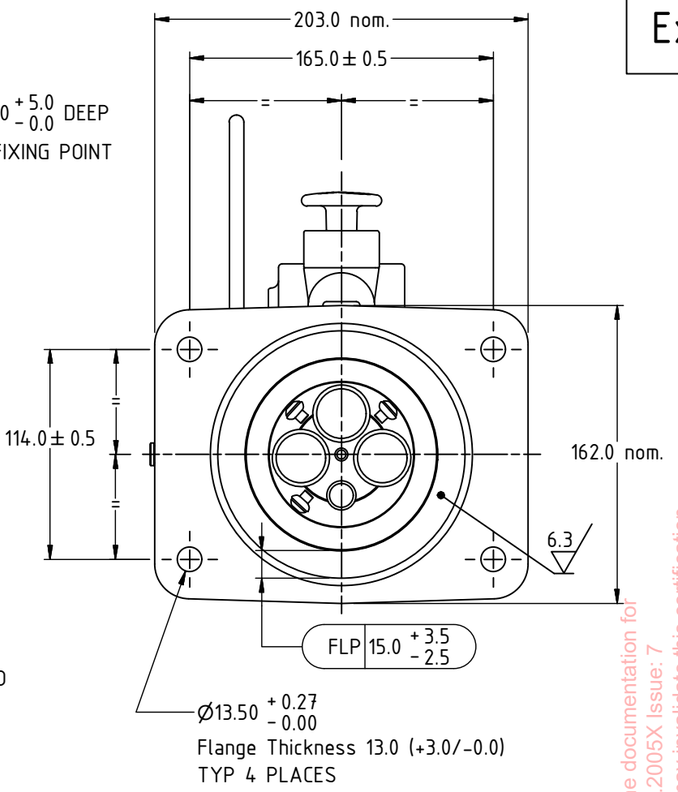

REAR FLANGE FLAMEPATH DETAIL J

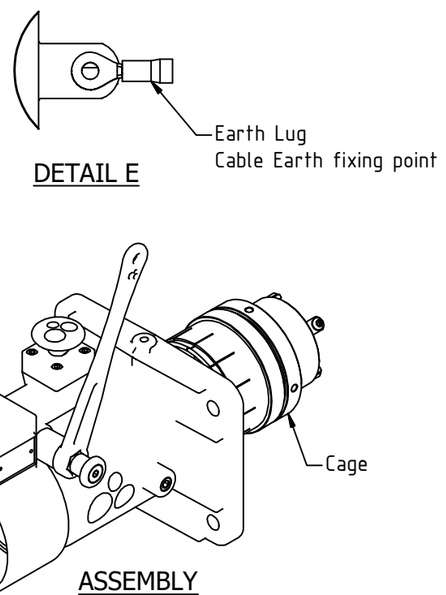

DETAIL E

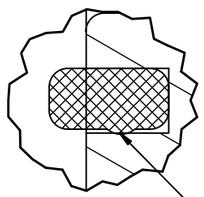

DETAIL HH

ASSEMBLY

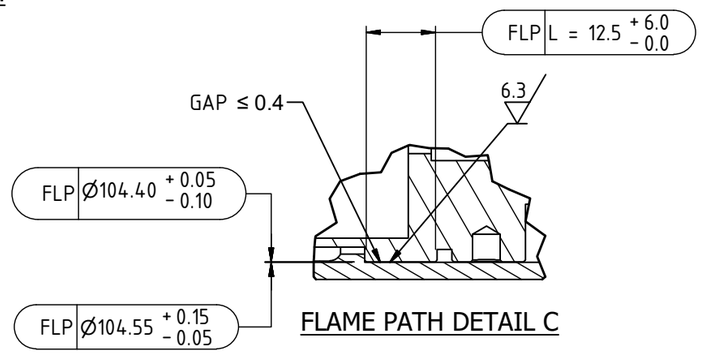

FLAME PATH DETAIL C

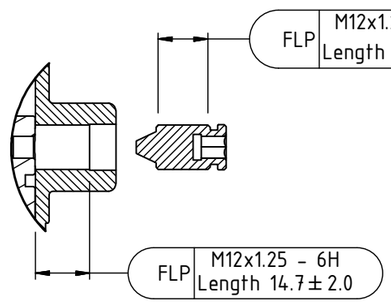

CAGE LOCKING SCREW
FLAME PATH SECTION A-A

This drawing forms part of the documentation for Certification: ANZEx 16.2005X Issue: 7
Alterations not authorised by Simtars may invalidate this certification.

AUSPROOF PTY LTD								
© COPYRIGHT RESERVED			DRAWN BY G.Coumessos					
DIMENSIONS (Metric-millimetre-mm) UNLESS OTHERWISE SPECIFIED	X.X 0.1 X.XX 0.05		APPROVED BY C.Taylor	DRAWING NUMBER ExRPR300M2-C1107	PRODUCT NAME Common QR 300 Receptacle Body CUSTOMER COPY	1	07/10/2020	D.Jensen	Updated to IECEx Standards
ALL SURFACES TO UNLESS OTHERWISE NOTED			SIZE A3			REVISION NUMBER	REVISION DATE	REVISION BY	REVISION DESCRIPTION

Ex

Ex

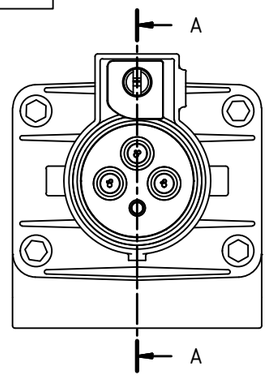

FRONT VIEW

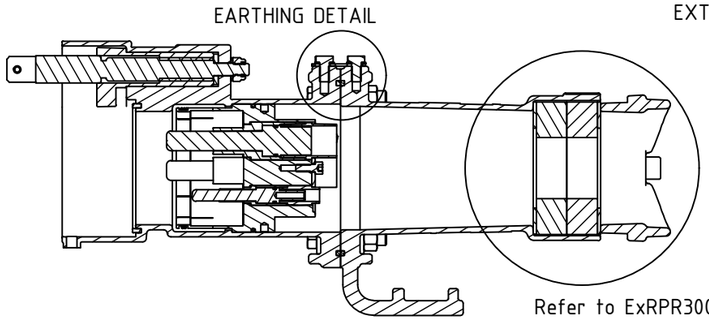

RECEPTACLE/GLAND ASSEMBLY
FLAMEPROOF PATH
SECTION A-A

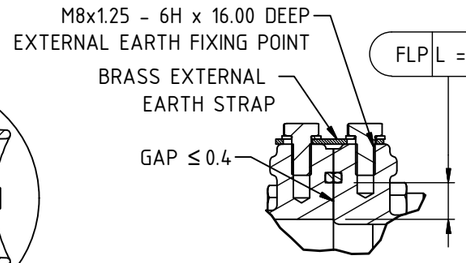

EARTHING DETAIL

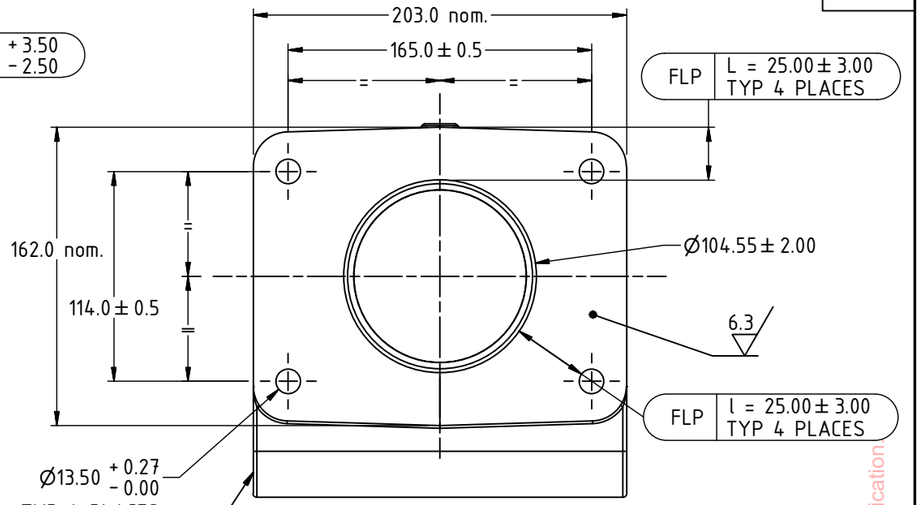

GLAND BRACKET
REAR FLANGE
NO O-RING
FLAME PROOF DETAILS

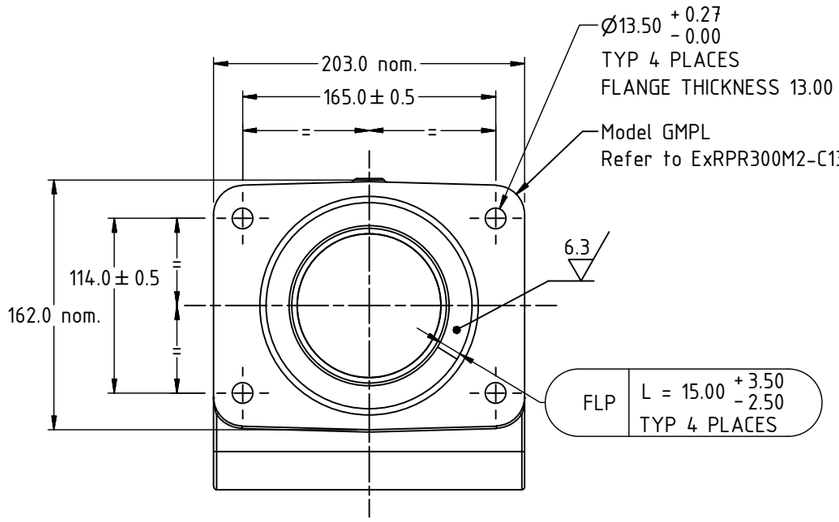

GLAND MOUNT
REAR FLANGE WITH O-RING
FOR OPTIONAL MOUNTING
FLAME PROOF DETAILS

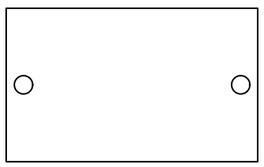

GLAND BRACKET / GLAND MOUNT
PRODUCT DATA LABEL
Refer to ExRPR300M2-C1312 Table 1.0

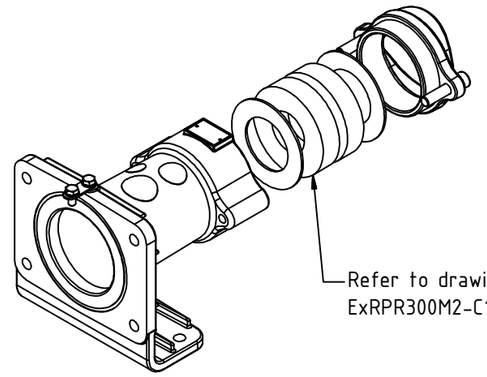

ASSEMBLY

This drawing forms part of the documentation for
Certification: ANZEx 16.2005X Issue: 7
Alterations not authorised by Simtars may invalidate this certification

AUSPROOF PTY LTD			DRAWN BY G.Coumessos					
© COPYRIGHT RESERVED			APPROVED BY C.Taylor	DRAWING NUMBER ExRPR300M2-C1108	PRODUCT NAME Common 300 Gland Bracket CUSTOMER COPY	2	08/01/2025	D.Jensen	Refer to drawings for Gland details: ExRPR300M2-C1303
DIMENSIONS (Metric-millimetre-mm) UNLESS OTHERWISE SPECIFIED	X.X 0.1 X.XX 0.05		SIZE A3			REVISION NUMBER	REVISION DATE	REVISION BY	REVISION DESCRIPTION
ALL SURFACES TO UNLESS OTHERWISE NOTED									

Ex

Ex

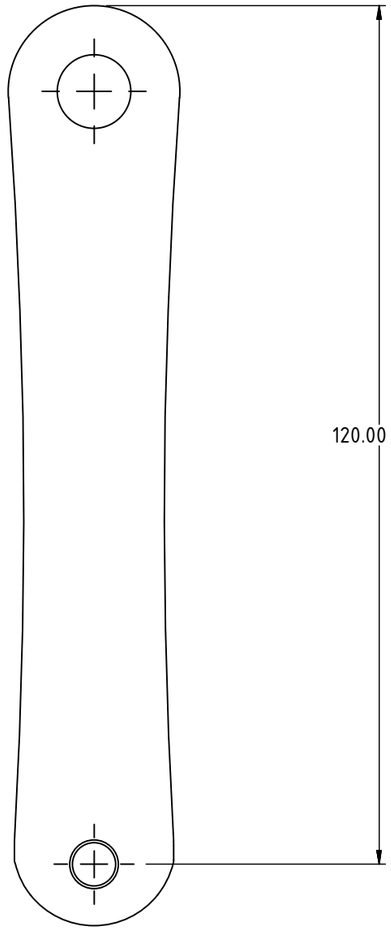

JACK IN HANDLE

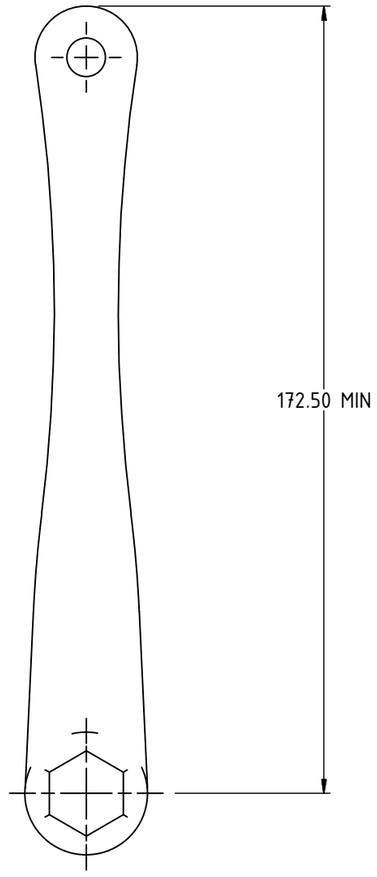

QUICK RELEASE HANDLE

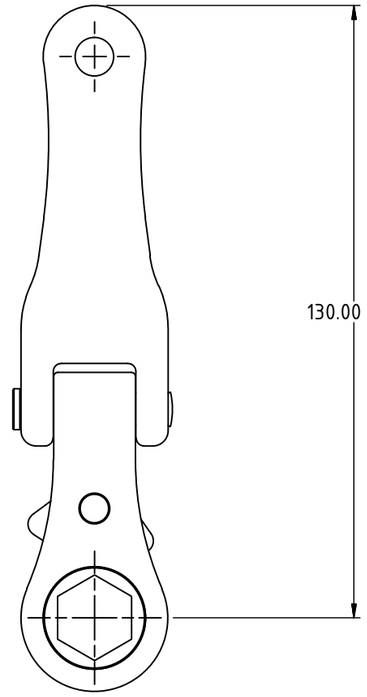

RATCHET RELEASE HANDLE

This drawing forms part of the documentation for
Certification: ANZEx 16.2005X Issue: 7
Alterations not authorised by Simtars may invalidate this certification.

AUSPROOF PTY LTD								
© COPYRIGHT RESERVED			DRAWN BY A.Castle					
DIMENSIONS (Metric-millimetre-mm) UNLESS OTHERWISE SPECIFIED	X.X 0.1 X.XX 0.05		APPROVED BY C.Taylor	DRAWING NUMBER ExRPR300M2-C1109	PRODUCT NAME Com 300 Operating Mech CUSTOMER COPY	0	05/10/2022	A.Castle	Added Operating Mechanism
ALL SURFACES TO UNLESS OTHERWISE NOTED			SIZE A3			REVISION NUMBER	REVISION DATE	REVISION BY	REVISION DESCRIPTION

Ex

Ex

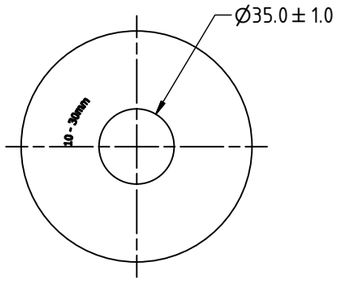

CABLE COMPRESSION WASHER

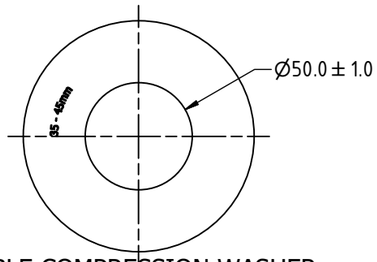

CABLE COMPRESSION WASHER

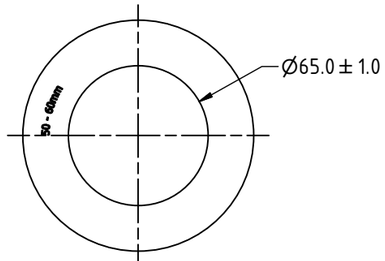

CABLE COMPRESSION WASHER

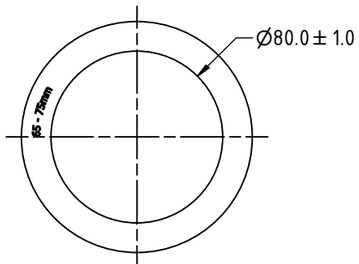

CABLE COMPRESSION WASHER

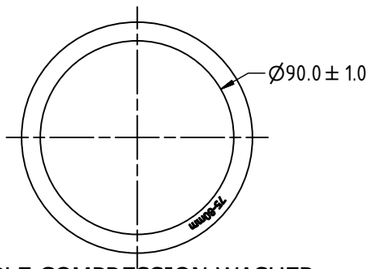

CABLE COMPRESSION WASHER

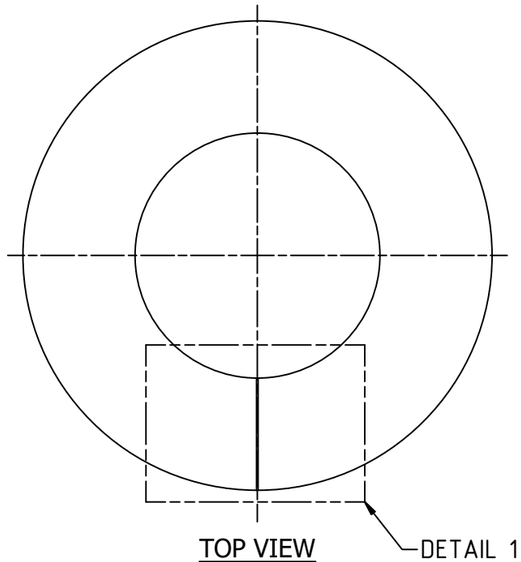

TOP VIEW
COMPRESSION GLAND RUBBER

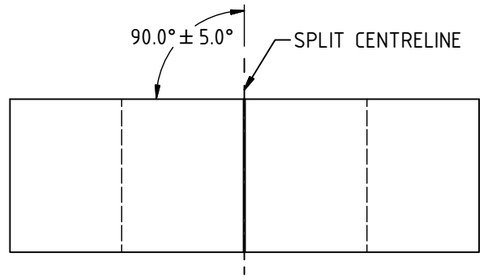

SIDE VIEW
COMPRESSION GLAND RUBBER

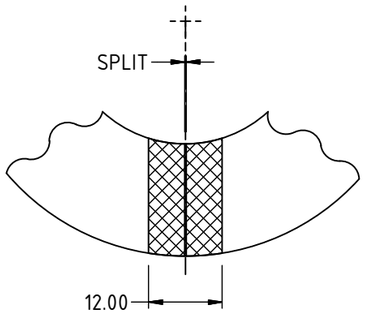

DETAIL 1

SPLIT IN RUBBER MUST BE CONTAINED
WITH IN THE HATCHED AREA
TYPICAL ALL COMPRESSION GLAND RUBBER SIZES

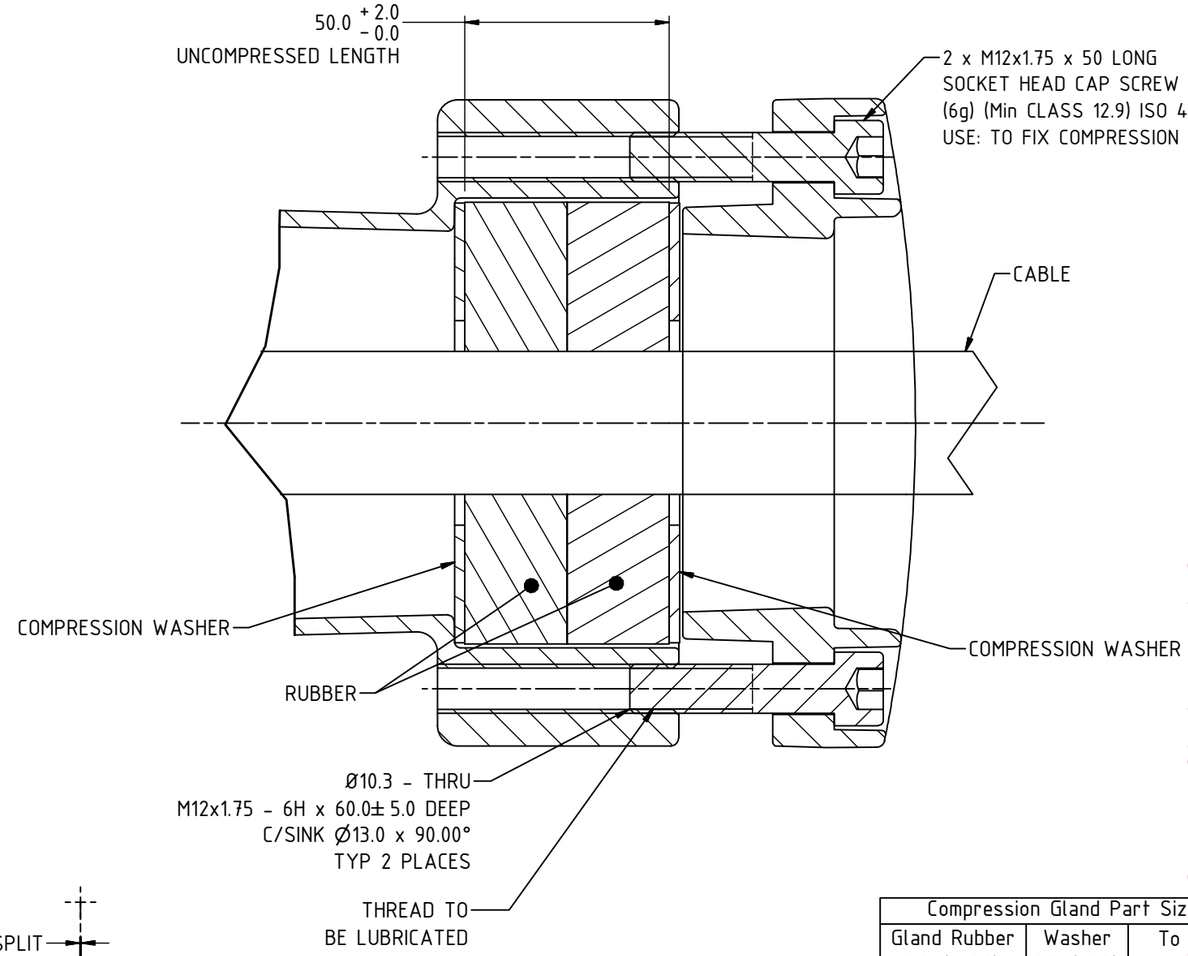

CABLE ENTRY DETAIL

Compression Gland Part Sizes		
Gland Rubber I.D. (± 1.0)	Washer I.D. (±1.0)	To Suit Cable O.D.
15	35	10 - 15
20	35	15 - 20
25	35	20 - 25
30	35	25 - 30
35	50	30 - 35
40	50	35 - 40
45	50	40 - 45
50	65	45 - 50
55	65	50 - 55
60	65	55 - 60
65	80	60 - 65
70	80	65 - 70
75	80	70 - 75
80	90	75 - 80

Note:
Rubber compression gland to be torqued to 25Nm

THREAD CLASS TO ISO 965
COARSE THREAD PITCH TO ISO 262

This drawing forms part of the documentation for Ex 16.2005X Issue: 7
Alterations not authorised by Simtars may invalidate this certification.

AUSPROOF PTY LTD

© COPYRIGHT RESERVED

DIMENSIONS (Metric-millimetre-mm) UNLESS OTHERWISE SPECIFIED ALL SURFACES TO UNLESS OTHERWISE NOTED	X.X 0.1 X.XX 0.05	DRAWN BY G.Coumessos APPROVED BY C.Taylor SIZE A3	DRAWING NUMBER ExRPR300M2-C1303	PRODUCT NAME Common 300 Plug Cable Clamp Assembly CUSTOMER COPY	3 REVISION NUMBER	12/12/2024 REVISION DATE	D.MINENKO REVISION BY	ADDED BOLT HEAD PROTECTION REVISION DESCRIPTION

Ex

Ex

16-120mm² Cable
Use 16-120 Phase Insulator Cap for:
Models: P634, P644, P134, P144

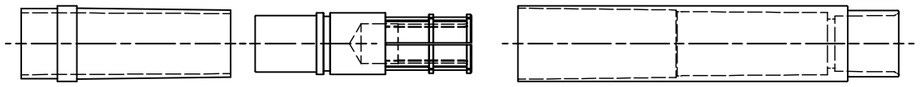

150-185mm² Cable
Use 150-185 Phase Insulator Cap and Split Ring for:
Models: P634, P644, P134, P144

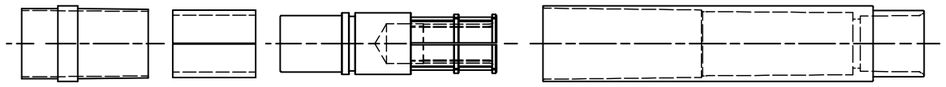

16-120mm² Cable
Use 16-120 Phase Insulator Cap for:
Models: P136, P146, P334, P336, P344, P346

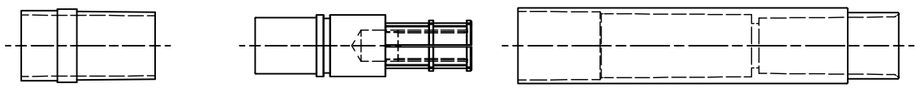

150-185mm² Cable
Use 150-185 Phase Insulator Cap and Split Ring for:
Models: P136, P146, P334, P336, P344, P346

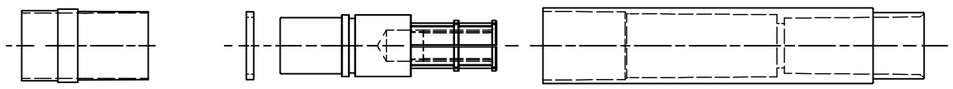

16-120mm² Cable
Use 16-120 Phase Insulator Cap for:
Models: R634, R644, R134, R136, R144, R146, R334, R336, R344, R346

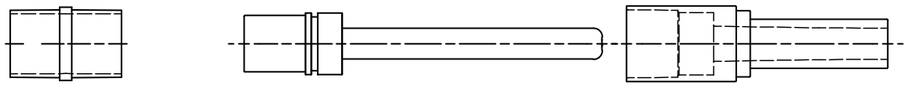

150-185mm² Cable
Use 150-185 Phase Insulator Cap and Split Ring for:
Models: R634, R644, R134, R136, R144, R146, R334, R336, R344, R346

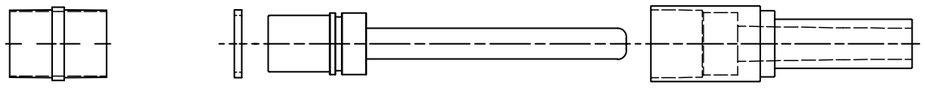

EXPLODED VIEWS

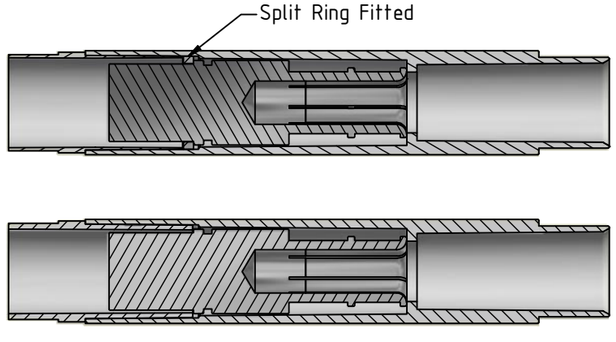

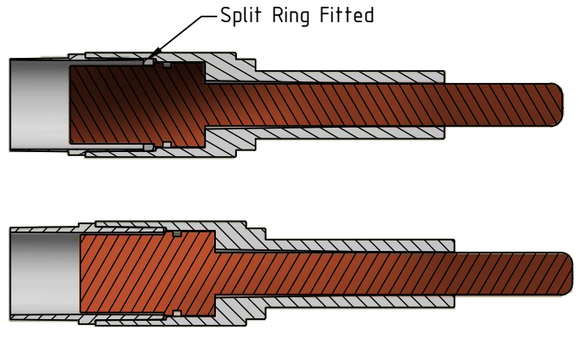

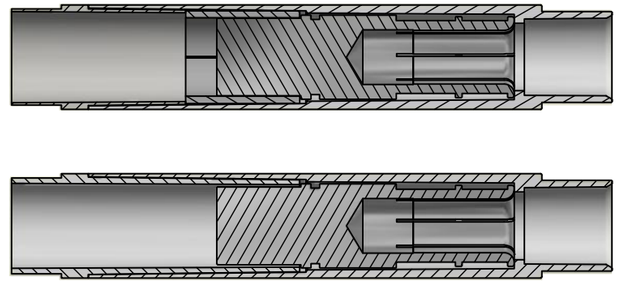

ASSEMBLIES FOR VISUAL REFERENCE ONLY

This drawing forms part of the documentation for Certification: ANZEx 16.2005X Issue: 7
Alterations not authorised by Simtars may invalidate this certification.

AUSPROOF PTY LTD

© COPYRIGHT RESERVED

DIMENSIONS (Metric-millimetre-mm) UNLESS OTHERWISE SPECIFIED ALL SURFACES TO UNLESS OTHERWISE NOTED	X.X 0.1 X.XX 0.05	DRAWN BY G.Coumessos APPROVED BY C.Taylor SIZE A3	DRAWING NUMBER ExRPR300M2-C1306	PRODUCT NAME 16-150mm² & 185mm² PHASE INSULATOR ASSEMBLY CUSTOMER COPY	1 REVISION NUMBER	07/10/2020 REVISION DATE	D.Jensen REVISION BY	Updated to IECEx Standards REVISION DESCRIPTION

Ex

Ex

FASTENER SCHEDULE

3 x M6x1.0 x 8 LONG Z/P BUTTON HEAD SOCKET CAP SCREWS (Class 12.9) (6g) ISO 7380
AND 3 x M6 S/S BELLEVILLE LOCK WASHERS
USE: EARTH FIXING SCREWS FOR PLUG CAGE BACK

1 x M6x1.0 x 100 LONG Z/P SOCKET HEAD CAP SCREW (Class12.9) (6g) ISO 4762
USE: TO FIX PLUG FRONT CAGE AND BACK CAGE TOGETHER

1 x M3x0.5 x 4 LONG S/S SOCKET HEAD CAP SCREW (700 MPa) (6g) ISO 4762
USE: FOR LOCATION LUG INSIDE PLUG

2 x M12x1.75 x 50 LONG Z/P SOCKET HEAD CAP SCREWS (Class 12.9) (6g) ISO 4762
USE: TO FIX COMPRESSION CLAMP

1 x M10x1.5 Z/P NYLOC NUT (Class 8) (6H) ISO 7040
AND 1 x M10 Z/P WASHER (Class 8) (200 HV) ISO 7089
USE: TO FIX PAWL SCREW INTO SOCKET BODY

1 x M6x1.0 x 16 LONG Z/P SOCKET HEAD CAP SCREW (Class 12.9) (6g) ISO 4762
USE: TO FIX SOCKET STAR RETAINING PLATE

3 x M6x1.0 x 8 LONG Z/P BUTTON HEAD SOCKET CAP SCREWS (Class 12.9) (6g) ISO 7380
AND 3 x M6 S/S BELLEVILLE LOCK WASHERS
USE: EARTH FIXING SCREWS FOR SOCKET CAGE

4 x 4GAUGE x 1/4" Z/P HAMMER DRIVE
USE: FIXING LABEL TO RECEPTACLE AND PLUG

1 x M8x1.25 x 16 LONG Z/P SET SCREW (Class 8.8) (6g) ISO 4017
AND 1 x M8 S/S BELLEVILLE LOCK WASHER
USE: EARTH FIXING SCREW ON MAIN FLANGE

4 x M12x1.75 x 55 (MIN LENGTH) Z/P SET SCREWS (Class 4.6) (6g) ISO 4017
WITH 4 x M12x1.75 Z/P NUTS (Class 8) (6H) ISO 4032
AND 8 x M12 Z/P WASHERS (Class 8) (200 HV) ISO 7089
OPTIONAL M12 x 1.75 HARDWARE MAY BE USED MUST HAVE A MINIMUM YIELD STRESS OF 240MPa
USE: TO FIX GLAND BRACKET TO RECEPTACLE

FIXING RECEPTACLE TO Ex d ENCLOSURE: PROPERTY CLASS ≥ 4.6*
*NOTE: SPECIFIED FASTENER PROPERTY CLASS TO BE ≥ THE FASTENER PROPERTY CLASS SPECIFIED FOR THE Ex ENCLOSURE.

THREAD CLASS TO ISO 965
COARSE THREAD PITCH TO ISO 262

This drawing forms part of the documentation for
Certification: ANZEx 16.2005X Issue: 7
Alterations not authorised by Simtars may invalidate this certification.

AUSPROOF PTY LTD

© COPYRIGHT RESERVED

DRAWN BY G.Coumessos								
DIMENSIONS (Metric-millimetre-mm) UNLESS OTHERWISE SPECIFIED	X.X 0.1 X.XX 0.05		APPROVED BY C.Taylor	DRAWING NUMBER	PRODUCT NAME	1	07/10/2020	D.Jensen	Updated to IECEx Standards
ALL SURFACES TO UNLESS OTHERWISE NOTED			SIZE A3	ExRPR300M2-C1309	FASTENER SCHEDULE CUSTOMER COPY	REVISION NUMBER	REVISION DATE	REVISION BY	REVISION DESCRIPTION

Ex

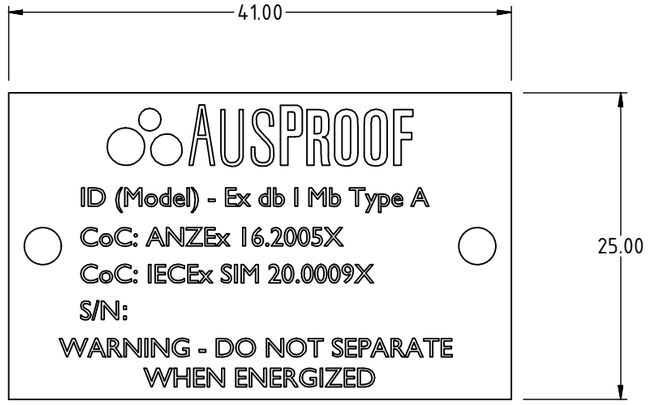

GLAND BRACKET / GLAND
MOUNT PRODUCT DATA LABEL
AS PER TABLE 1.0

Table 1.0	
Model	Volts Range
GBPL	660 - 3300
GMPL	660 - 3300

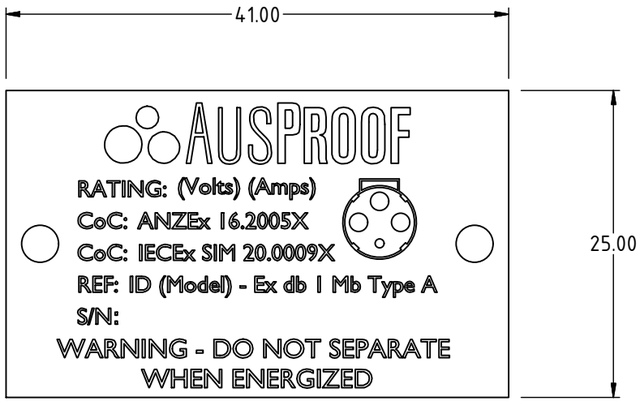

PLUG AND RECEPTACLE
PRODUCT DATA LABEL
AS PER TABLE 2.0

Table 2.0		
Model	Volts	Amps
P634	660	300
R634	660	300
QRR634	660	300
P644	660	425
R644	660	425
QRR644	660	425
P134	1100	300
R134	1100	300
QRR134	1100	300
P144	1100	425
R144	1100	425
RR144	1100	425
P136	1100	300
R136	1100	300
QRR136	1100	300
P146	1100	425
R146	1100	425
QRR146	1100	425
P334	3300	300
R334	3300	300
QRR334	3300	300
P344	3300	425
R344	3300	425
QRR344	3300	425
P336	3300	300
R336	3300	300
QRR336	3300	300
P346	3300	425
R346	3300	425
QRR346	3300	425

Ex

This drawing forms part of the documentation for
Certification: ANZEx 16.2005X Issue: 7
Alterations not authorised by Simtars may invalidate this certification.

AUSPROOF PTY LTD

© COPYRIGHT RESERVED

DRAWN BY: G.Coumessos
APPROVED BY: C.Taylor
SIZE: A3
DRAWING NUMBER: ExRPR300M2-C1312
PRODUCT NAME: Product marking labels CUSTOMER COPY

DIMENSIONS (Metric-millimetre-mm) UNLESS OTHERWISE SPECIFIED
X.X 0.1
X.XX 0.05
ALL SURFACES TO UNLESS OTHERWISE NOTED

REVISION NUMBER	REVISION DATE	REVISION BY	REVISION DESCRIPTION
1	07/10/2020	D.Jensen	Updated to IECEx Standards

Ex

Ex

1 x M10x1.5 x 25 Z/P BHCS PN1824 (MIN Class 8.8) (6g) ISO 7380 OR A2/A4-70 STAINLESS STEEL PN10147
AND 1 x 3/8 x 1" Z/P WASHER PN1941 (Min Class 5) (140 HV) ISO 7089 OR A2/A4-70 STAINLESS STEEL PN10152
USE: TO FIX RATCHET RELEASE

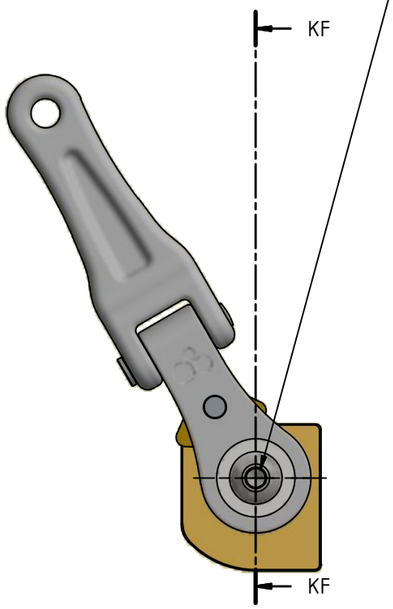

FRONT VIEW

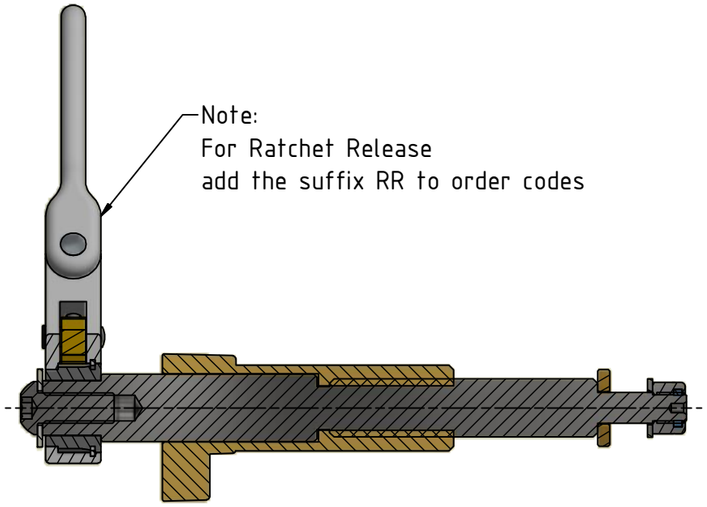

SECTION KF-KF

MODEL IDENTIFICATION CROSS REFERENCE TABLE
RECEPTACLE TYPE
R634RR
R644RR
R134RR
R136RR
R144RR
R146RR
R334RR
R336RR
R344RR
R346RR

1 x M8x1.25 x 20 Z/P SHCS PN1077 (MIN Class 8.8) (6g) ISO 4762 OR A2/A4-70 STAINLESS STEEL PN10119
USE: TO FIX RATCHET RELEASE

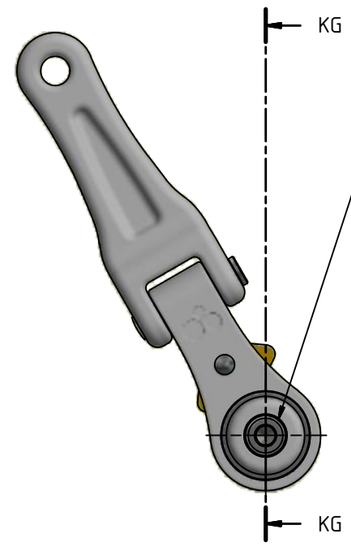

FRONT VIEW

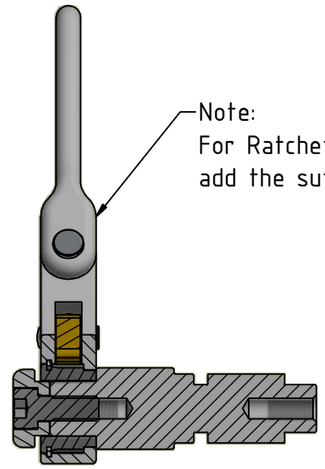

SECTION KG-KG

MODEL IDENTIFICATION CROSS REFERENCE TABLE
QUICK RELEASE RECEPTACLE TYPE
QRR634RR
QRR644RR
QRR134RR
QRR136RR
QRR144RR
QRR146RR
QRR334RR
QRR336RR
QRR344RR
QRR346RR

This drawing forms part of the documentation for
Certification: ANZEx 16.2005X Issue: 7
Alterations not authorised by Simtars may invalidate this certification.

AUSPROOF PTY LTD

© COPYRIGHT RESERVED

DIMENSIONS (Metric-millimetre-mm) UNLESS OTHERWISE SPECIFIED ALL SURFACES TO UNLESS OTHERWISE NOTED	X.X 0.1 X.XX 0.05		DRAWN BY C.Taylor APPROVED BY D.Jensen SIZE A3	DRAWING NUMBER ExRPR300M2-C1313	PRODUCT NAME Common 300 Receptacle RR CUSTOMER COPY	0 REVISION NUMBER	12/12/2024 REVISION DATE	C.Taylor REVISION BY	FIXED FASTENER ISO REVISION DESCRIPTION

Ex

Ex

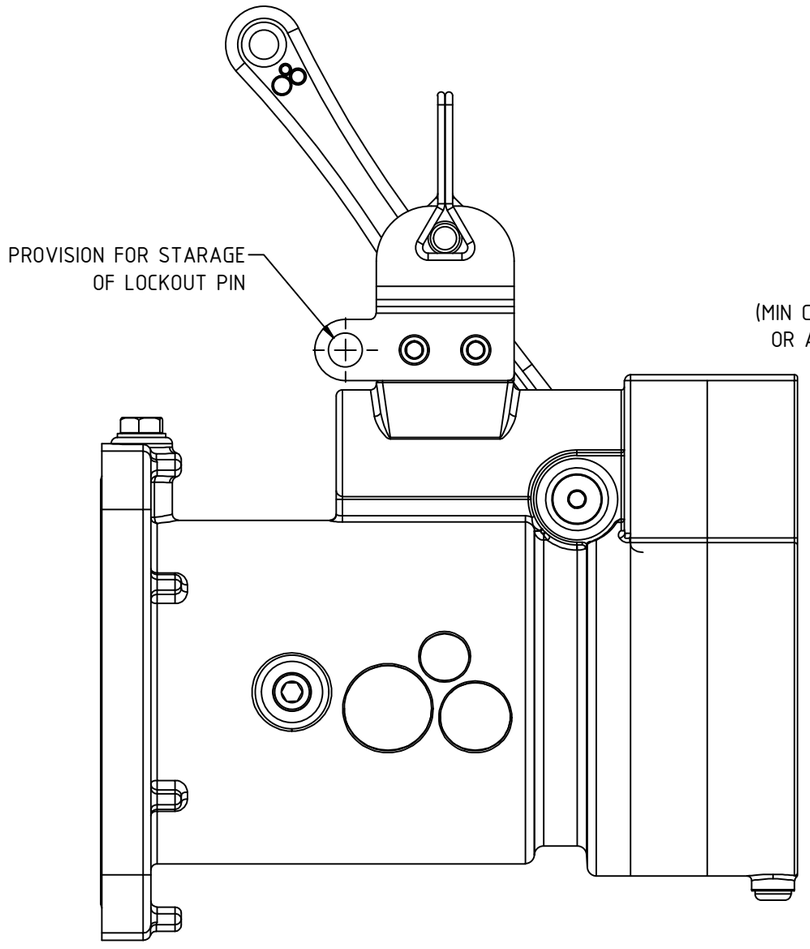

SIDE VIEW

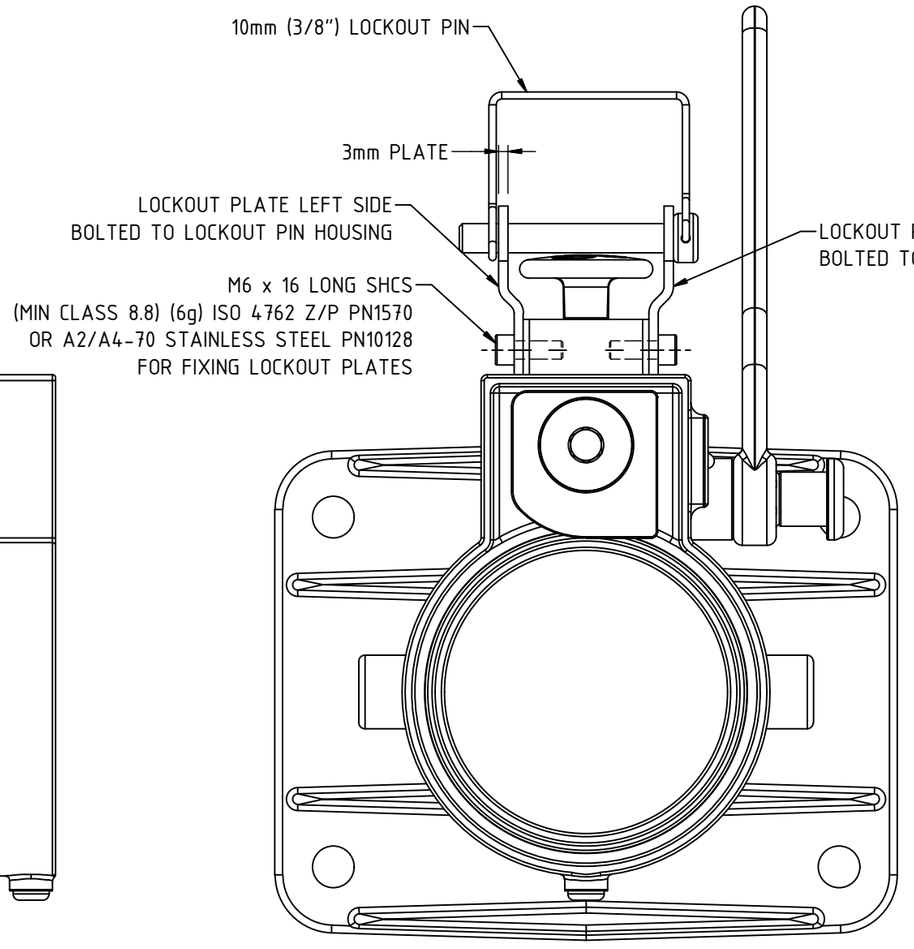

FRONT VIEW

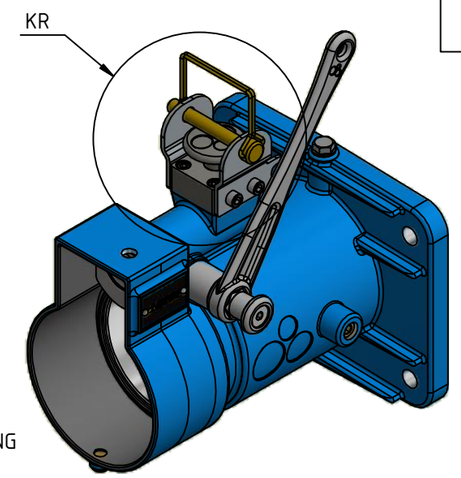

ISOMETRIC VIEW

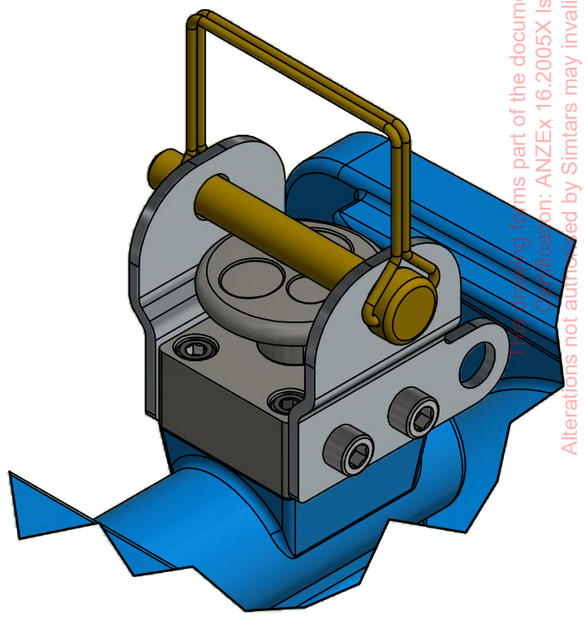

DETAIL KR

RACKING HANDLE NOT SHOWN FOR CLARITY

This drawing forms part of the documentation for
ANZEx Certification: ANZEx 16.2005X Issue: 7
Alterations not authorised by Simtars may invalidate this certification.

AUSPROOF PTY LTD								
© COPYRIGHT RESERVED			DRAWN BY D.Jensen					
DIMENSIONS (Metric-millimetre-mm) UNLESS OTHERWISE SPECIFIED	X.X 0.1 X.XX 0.05		APPROVED BY A.Castle	DRAWING NUMBER ExRPR300M2-C1316	PRODUCT NAME 300 Receptacle Pin Lockout CUSTOMER COPY	0	07/03/2022	D.Jensen	INITIAL RELEASE
ALL SURFACES TO UNLESS OTHERWISE NOTED			SIZE A3			REVISION NUMBER	REVISION DATE	REVISION BY	REVISION DESCRIPTION

Ex

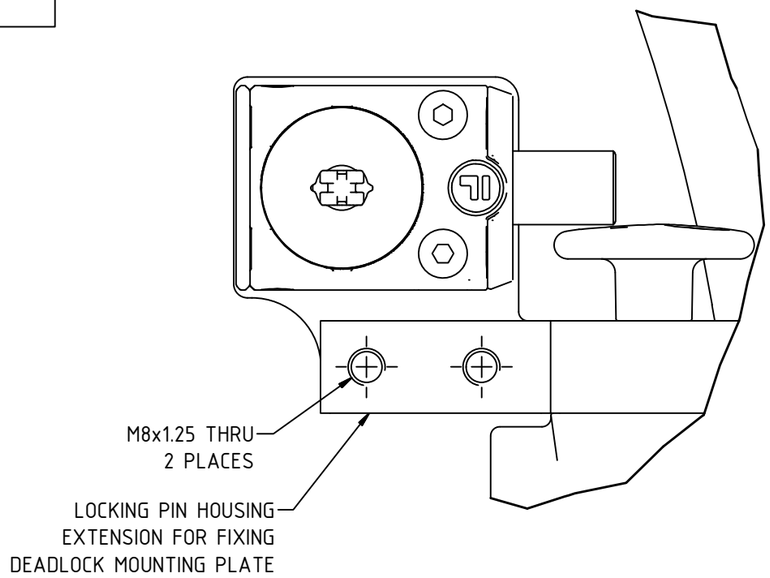

DETAIL KU

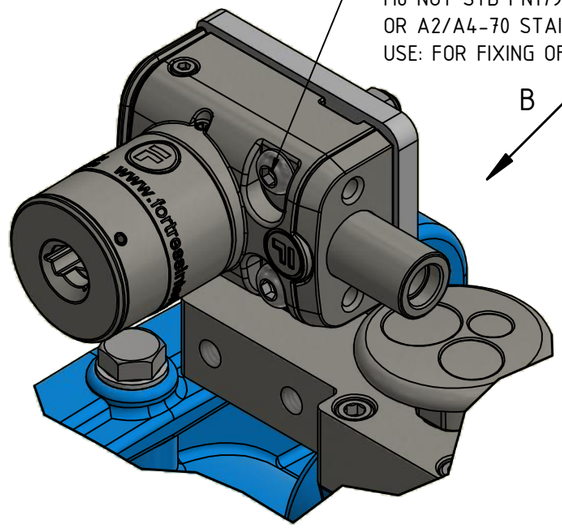

DETAIL KT

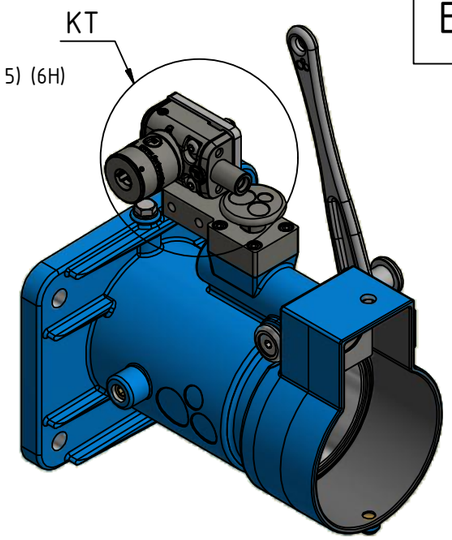

ISOMETRIC VIEW

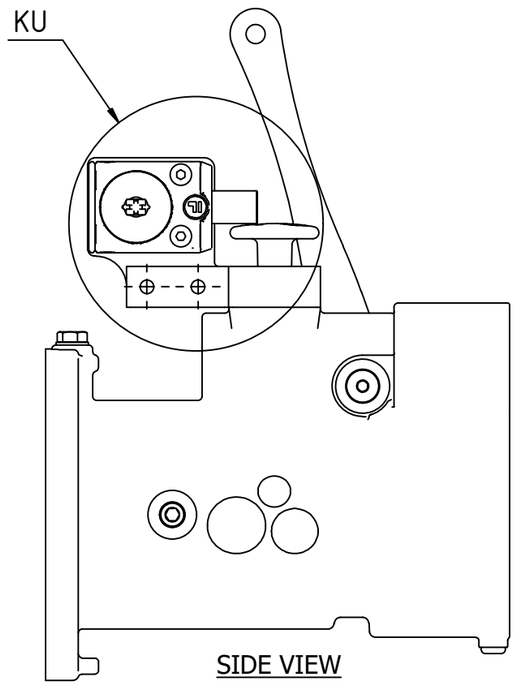

SIDE VIEW

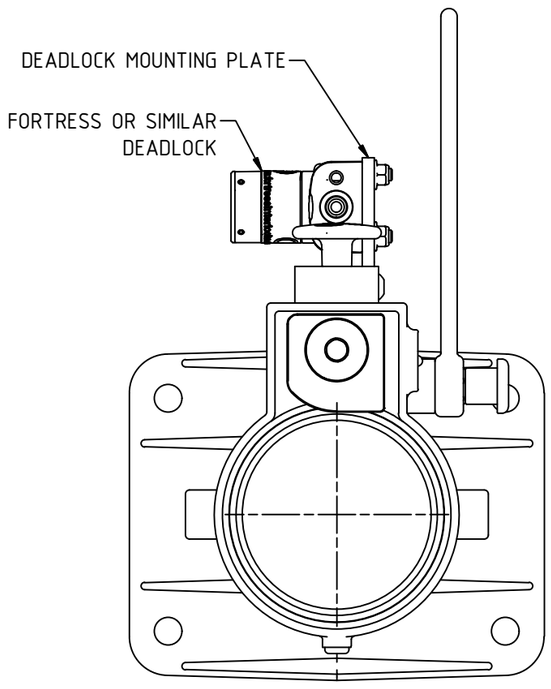

FRONT VIEW

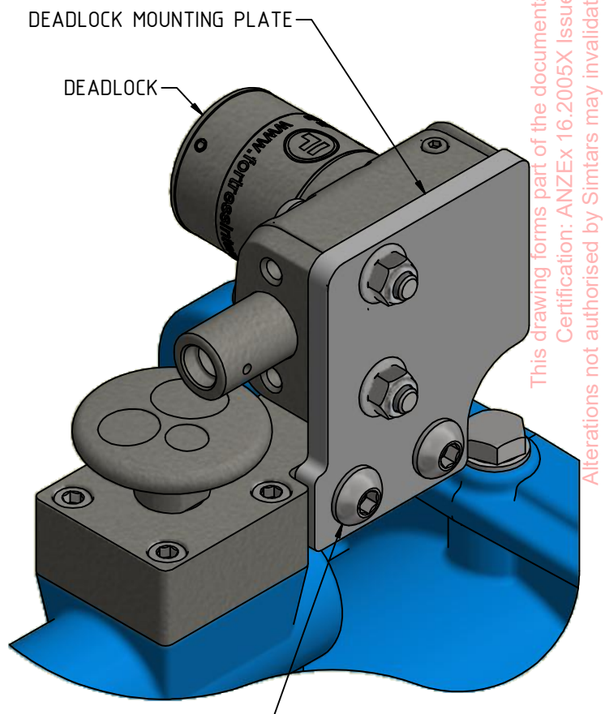

VIEW FROM B

This drawing forms part of the documentation for
Certification: ANZEx 16.2005X Issue: 7
Alterations not authorised by Simtars may invalidate this certification.

Ex

AUSPROOF PTY LTD		DRAWN BY D.Jensen					
© COPYRIGHT RESERVED		APPROVED BY C.Taylor	DRAWING NUMBER ExRPR300M2-C1317	PRODUCT NAME 300 Receptacle Deadlock CUSTOMER COPY	0	12/12/2024	D.Jensen	INITIAL RELEASE
DIMENSIONS (Metric-millimetre-mm) UNLESS OTHERWISE SPECIFIED ALL SURFACES TO UNLESS OTHERWISE NOTED	X.X 0.1 X.XX 0.05	SIZE A3			REVISION NUMBER	REVISION DATE	REVISION BY	REVISION DESCRIPTION

Ex

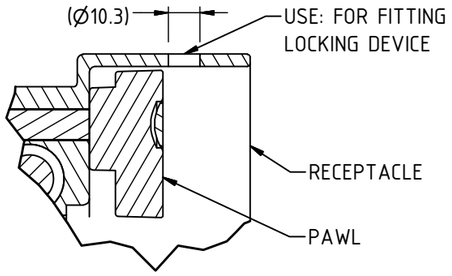

DETAIL FOR LOCKING DEVICE LOCATION

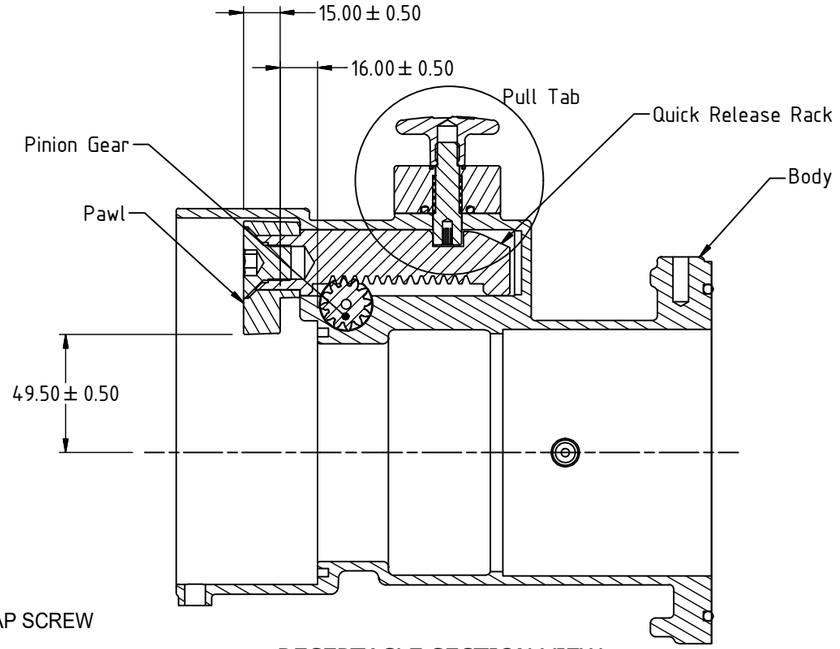

RECEPTACLE SECTION VIEW

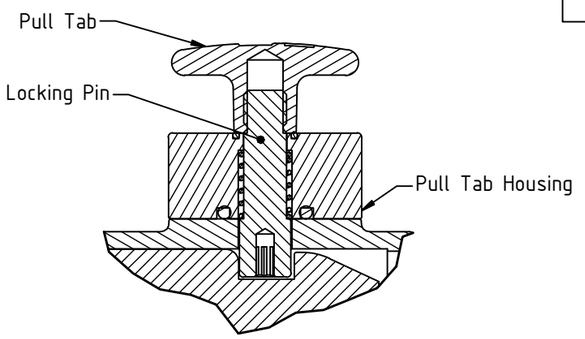

PULL TAB DETAIL

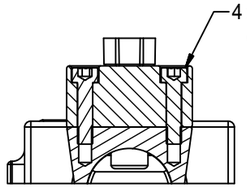

SECTION KA-KA

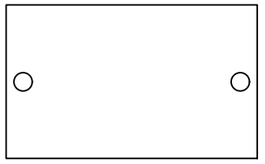

RECEPTACLE PRODUCT DATA LABEL
Refer to ExRPR300M2-1312 Table 2.0

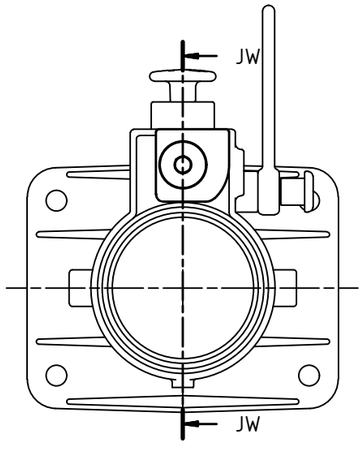

PAWL WITHDRAWN

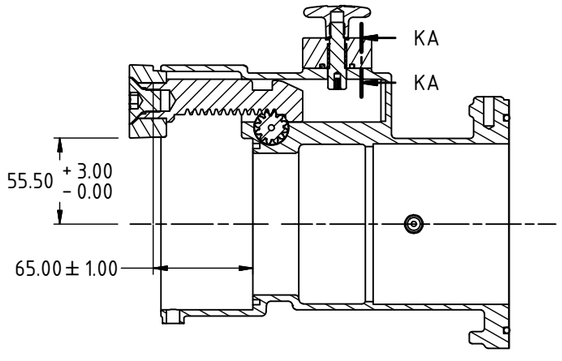

SECTION JW-JW

MODEL IDENTIFICATION CROSS REFERENCE TABLE
QUICK RELEASE TYPE RECEPTACLE
QRR634
QRR644
QRR134
QRR136
QRR144
QRR146
QRR334
QRR336
QRR344
QRR346

Ex

This drawing forms part of the documentation for Certification: ANZEx 16.2005X Issue: 7
Alterations not authorised by Simtars may invalidate this certification.

AUSPROOF PTY LTD

© COPYRIGHT RESERVED

DIMENSIONS (Metric-millimetre-mm) UNLESS OTHERWISE SPECIFIED ALL SURFACES TO UNLESS OTHERWISE NOTED	X.X 0.1 X.XX 0.05	DRAWN BY G.Coumessos APPROVED BY C.Taylor SIZE A3	DRAWING NUMBER ExRPR300QR-C1310	PRODUCT NAME 300 QR Receptacle Body CUSTOMER COPY	1	07/10/2020	D.Jensen	Updated to IECEx Standards
					REVISION NUMBER	REVISION DATE	REVISION BY	REVISION DESCRIPTION

Ex

Ex

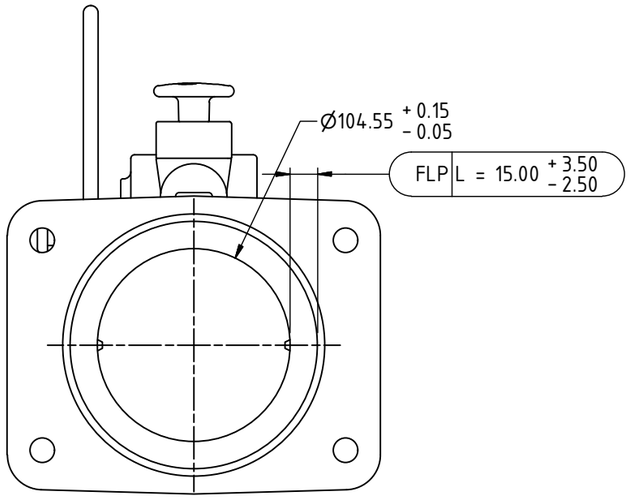

REAR FLANGE FLAMEPATH

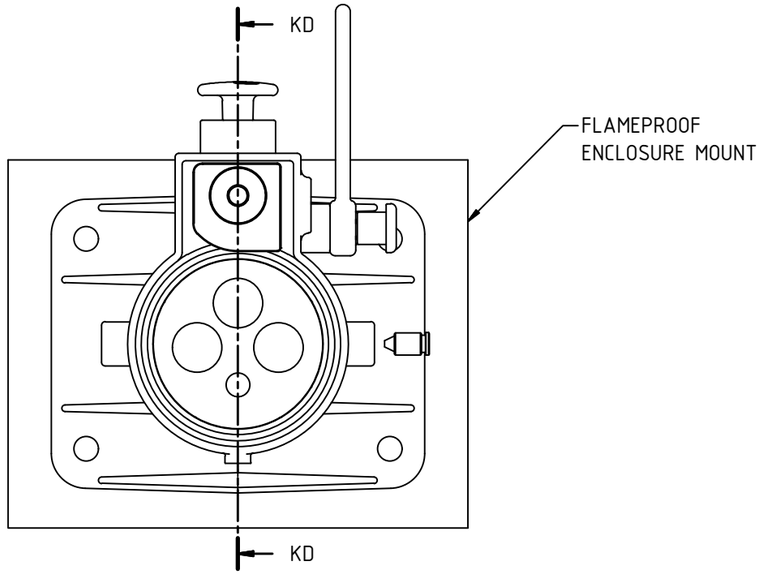

RECEPTACLE FRONT VIEW
MOUNTED TO ENCLOSURE

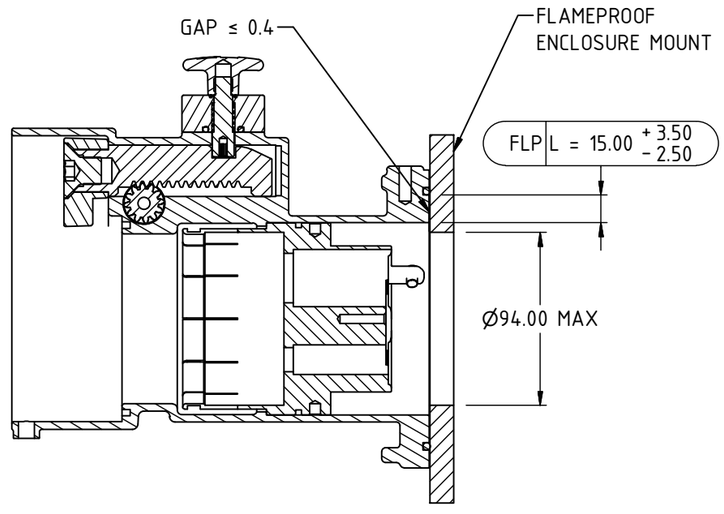

SECTION KD-KD

This drawing forms part of the documentation for
Certification: ANZEx 16.2005X Issue: 7
Alterations not authorised by Simtars may invalidate this certification.

AUSPROOF PTY LTD								
© COPYRIGHT RESERVED			DRAWN BY G.Coumessos					
DIMENSIONS (Metric-millimetre-mm) UNLESS OTHERWISE SPECIFIED	X.X 0.1 X.XX 0.05		APPROVED BY C.Taylor	DRAWING NUMBER	PRODUCT NAME	1	07/10/2020	D.Jensen	Updated to IECEx Standards
ALL SURFACES TO UNLESS OTHERWISE NOTED			SIZE A3	ExRPR300QR-C1311	300 Receptacle Rear FLP CUSTOMER COPY	REVISION NUMBER	REVISION DATE	REVISION BY	REVISION DESCRIPTION

Ex

Ex

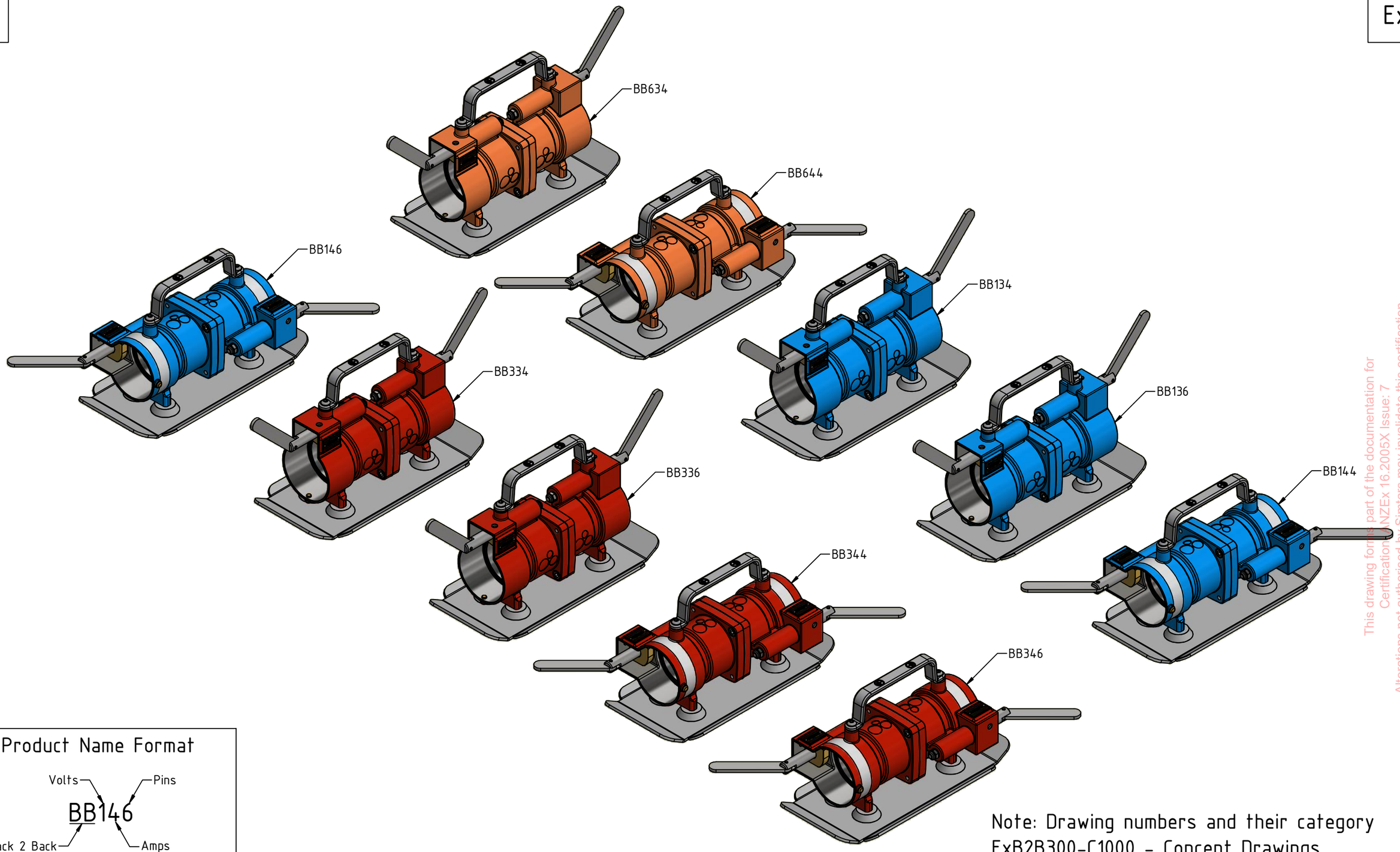

Product Name Format

Note: Drawing numbers and their category
ExB2B300-C1000 - Concept Drawings
ExB2B300-C1100 - Flameproof
ExB2B300-C1200 - Product Range
ExB2B300-C1300 - General

This drawing forms part of the documentation for Certification IECEx 16.2005X Issue: 7
Alterations not authorised by Simtars may invalidate this certification.

AUSPROOF PTY LTD

© COPYRIGHT RESERVED

DIMENSIONS (Metric-millimetre-mm) UNLESS OTHERWISE SPECIFIED	X.X 0.1 X.XX 0.05		DRAWN BY G.Coumessos	DRAWING NUMBER	PRODUCT NAME	0	05/02/19	D.Jensen	Updated to IECEx Standards
ALL SURFACES TO UNLESS OTHERWISE NOTED			APPROVED BY C.Taylor	ExB2B300-C1000	300 B2B Series Index CUSTOMER COPY	REVISION NUMBER	REVISION DATE	REVISION BY	REVISION DESCRIPTION
			SIZE A3						

Ex

Ex

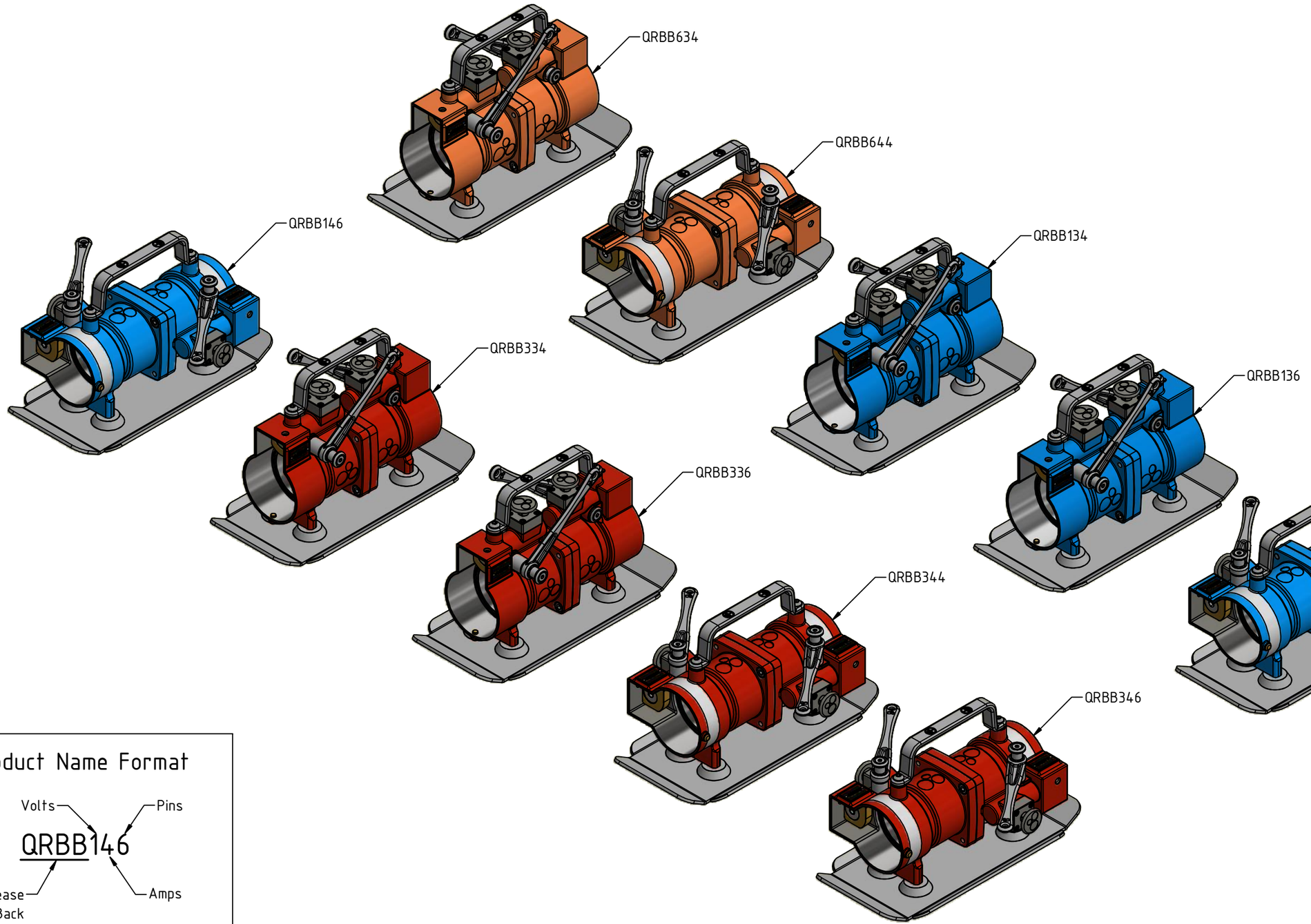

Product Name Format

This drawing forms part of the documentation for
Certification: ANZEx 16.2005X Issue: 7
Alterations not authorised by Simtars may invalidate this certification.

AUSPROOF PTY LTD

© COPYRIGHT RESERVED

DRAWN BY G.Coumessos								
DIMENSIONS (Metric-millimetre-mm) UNLESS OTHERWISE SPECIFIED	X.X 0.1 X.XX 0.05		APPROVED BY C.Taylor	DRAWING NUMBER	PRODUCT NAME	0	05/02/19	D.Jensen	Updated to IECEx Standards
ALL SURFACES TO UNLESS OTHERWISE NOTED			SIZE A3	ExB2B300-C1001	300 QR B2B Series Index CUSTOMER COPY	REVISION NUMBER	REVISION DATE	REVISION BY	REVISION DESCRIPTION

Ex

Ex

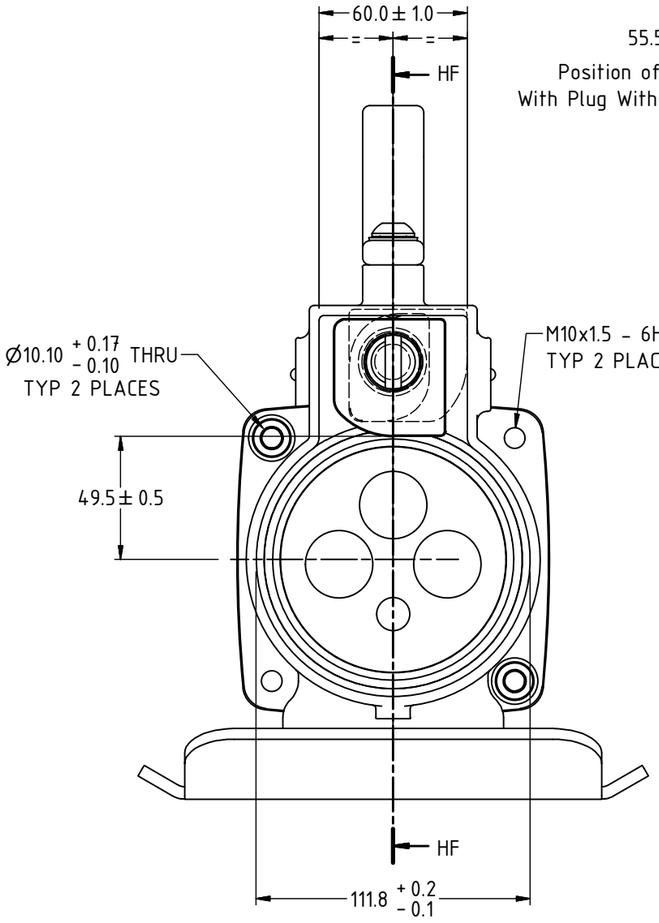

TOP VIEW

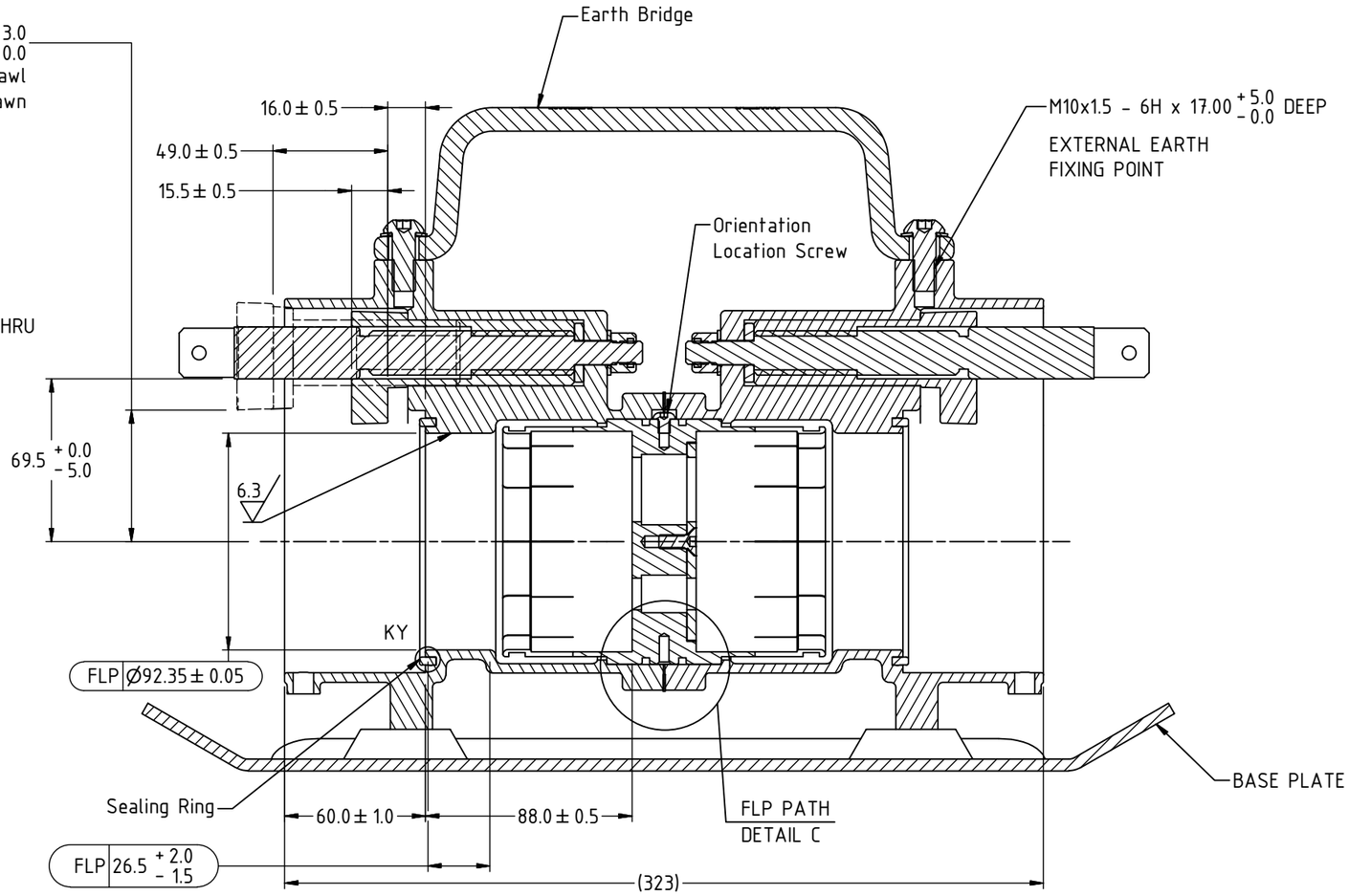

SECTION HF-HF

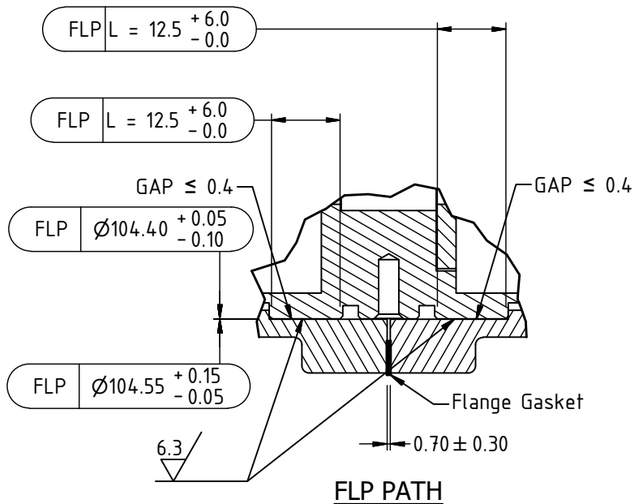

FLP PATH
DETAIL C

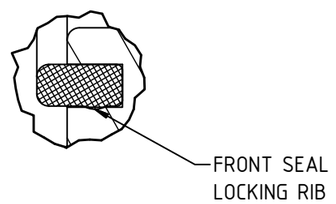

DETAIL KY

This drawing forms part of the documentation for
Certification: ANZEx 16.2005X Issue: 7
Alterations not authorised by Simtars may invalidate this certification.

AUSPROOF PTY LTD								
© COPYRIGHT RESERVED			DRAWN BY G.Coumessos					
DIMENSIONS (Metric-millimetre-mm) UNLESS OTHERWISE SPECIFIED	X.X 0.1 X.XX 0.05		APPROVED BY C.Taylor	DRAWING NUMBER ExB2B300-C1100	PRODUCT NAME Common B2B Receptacle Body CUSTOMER COPY	0	02/05/2019	D.Jensen	Updated to IECEx Standards
ALL SURFACES TO UNLESS OTHERWISE NOTED			SIZE A3			REVISION NUMBER	REVISION DATE	REVISION BY	REVISION DESCRIPTION

Ex

Ex

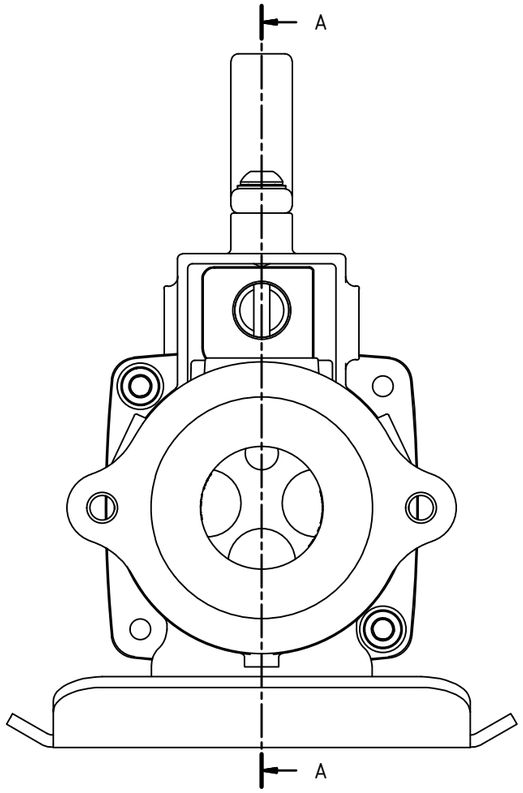

PLUG INSERTED INTO BACK TO BACK RECEPTACLE
END VIEW

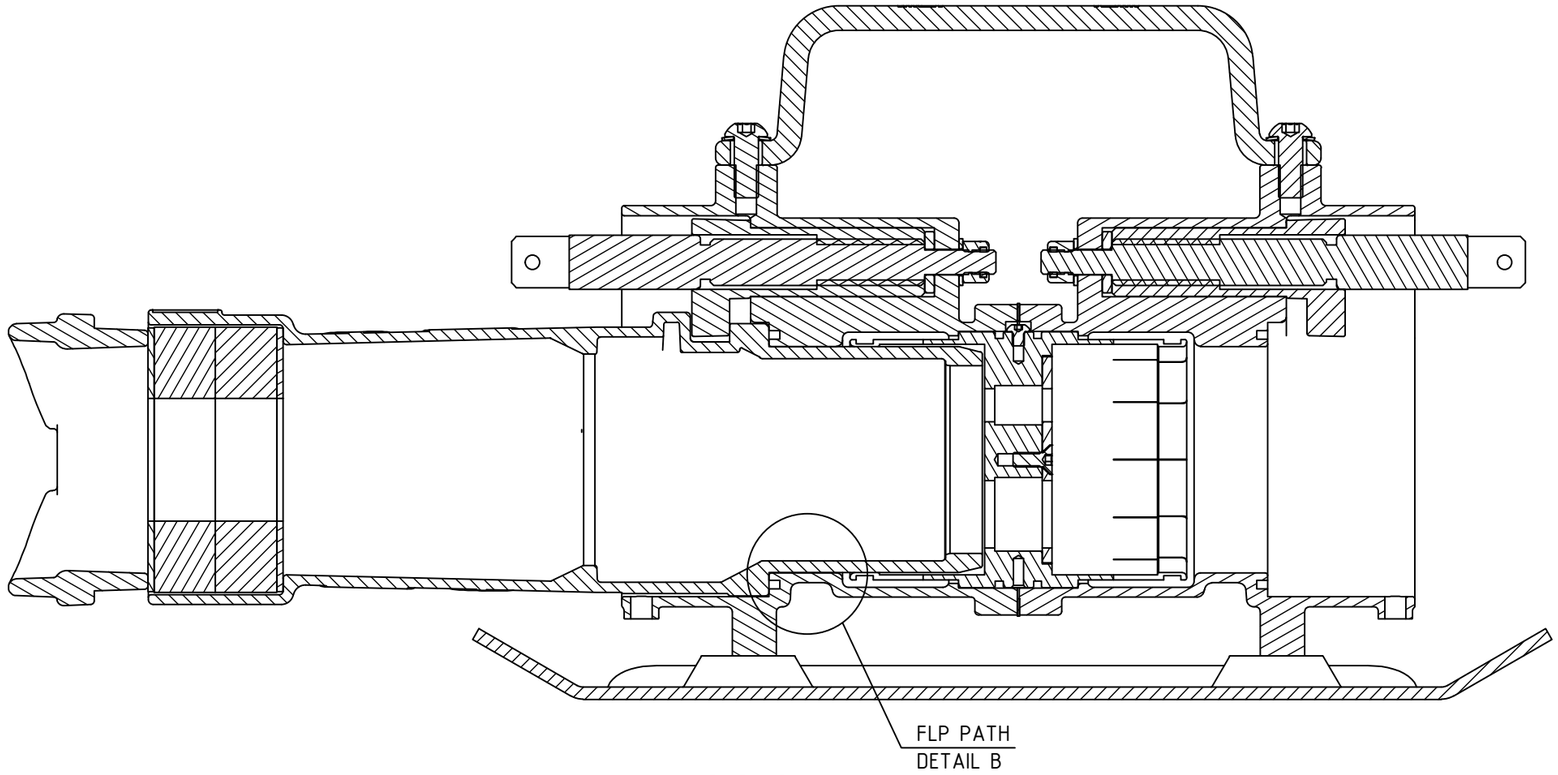

SECTION A-A

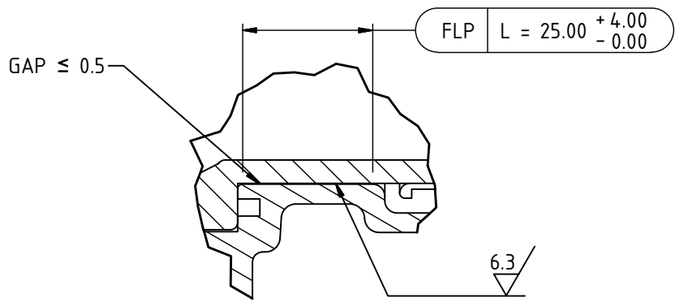

FLP PATH
DETAIL B

This drawing forms part of the documentation for
Certification: ANZEx 16.2005X Issue: 7
Alterations not authorised by Simtars may invalidate this certification.

AUSPROOF PTY LTD								
© COPYRIGHT RESERVED			DRAWN BY G.Coumessos					
DIMENSIONS (Metric-millimetre-mm) UNLESS OTHERWISE SPECIFIED	X.X 0.1 X.XX 0.05		APPROVED BY C.Taylor	DRAWING NUMBER	PRODUCT NAME	0	02/05/2019	D.Jensen	Updated to IECEx Standards
ALL SURFACES TO UNLESS OTHERWISE NOTED			SIZE A3	ExB2B300-C1101	Plug & B2B Body Engaged CUSTOMER COPY	REVISION NUMBER	REVISION DATE	REVISION BY	REVISION DESCRIPTION

Ex

Ex

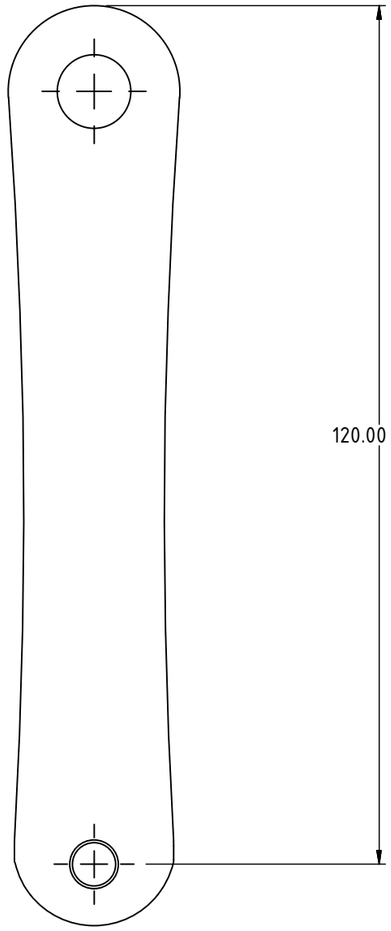

JACK IN HANDLE

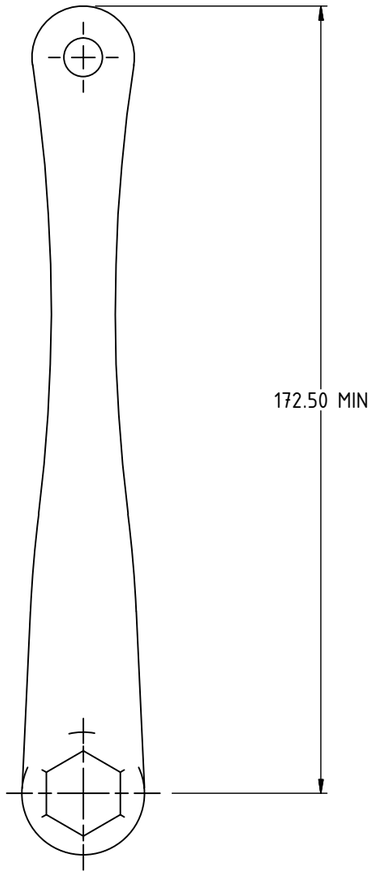

QUICK RELEASE HANDLE

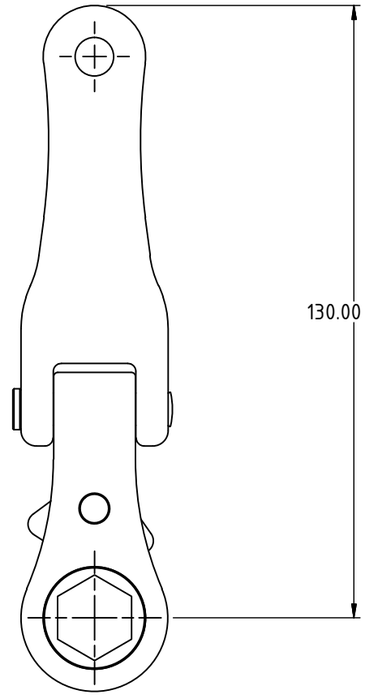

RATCHET RELEASE HANDLE

This drawing forms part of the documentation for
Certification: ANZEx 16.2005X Issue: 7
Alterations not authorised by Simtars may invalidate this certification.

AUSPROOF PTY LTD								
© COPYRIGHT RESERVED			DRAWN BY A.Castle					
DIMENSIONS (Metric-millimetre-mm) UNLESS OTHERWISE SPECIFIED	X.X 0.1 X.XX 0.05		APPROVED BY C.Taylor	DRAWING NUMBER ExB2B300-C1102	PRODUCT NAME Com 300 Operating Mech CUSTOMER COPY	0	06/10/2022	A.Castle	Added Operating Mechanism
ALL SURFACES TO UNLESS OTHERWISE NOTED			SIZE A3			REVISION NUMBER	REVISION DATE	REVISION BY	REVISION DESCRIPTION

Ex

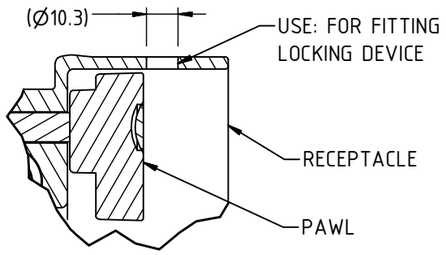

DETAIL FOR LOCKING DEVICE LOCATION

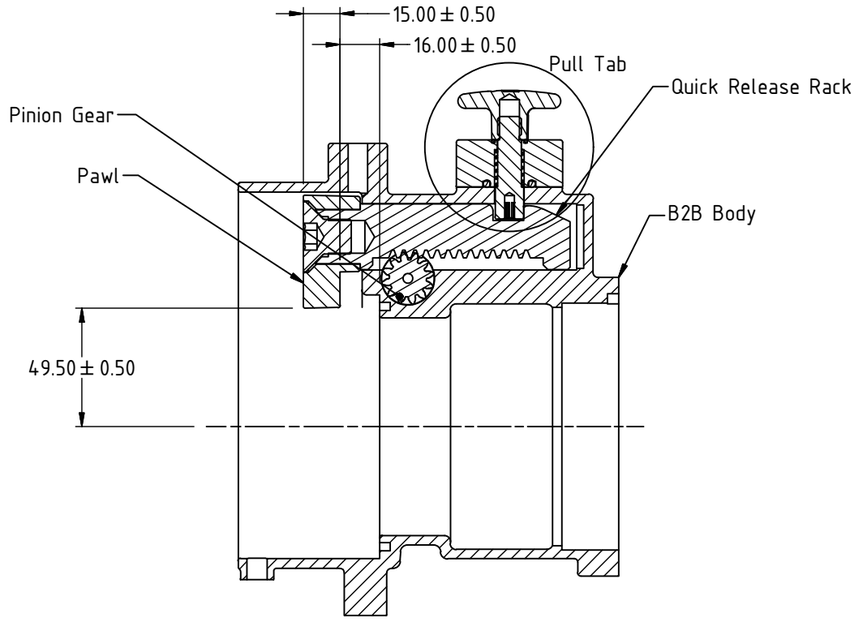

BACK TO BACK SECTION VIEW

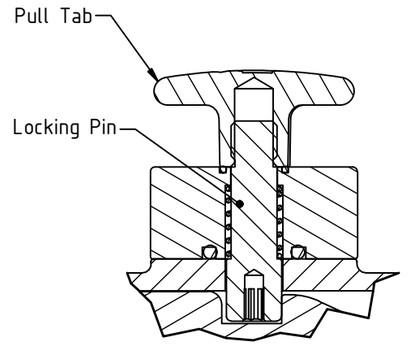

PULL TAB DETAIL

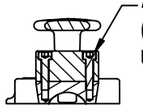

SECTION LG-LG

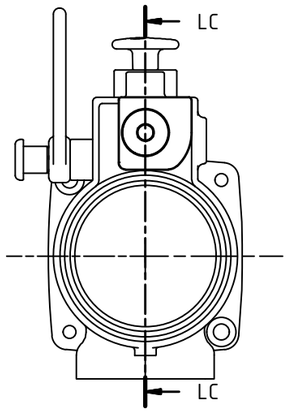

PAWL WITHDRAWN

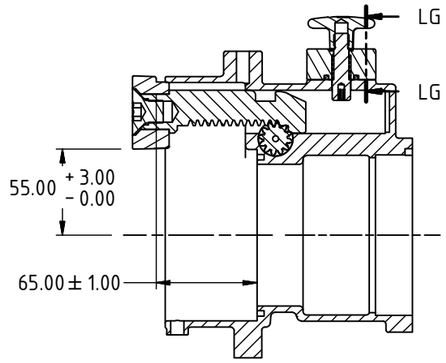

SECTION LC-LC

MODEL IDENTIFICATION CROSS REFERENCE TABLE
QUICK RELEASE TYPE BACK TO BACK
QRBB634
QRBB644
QRBB134
QRBB136
QRBB144
QRBB146
QRBB334
QRBB336
QRBB344
QRBB346



BACK TO BACK PRODUCT DATA LABEL
Refer to ExB2B300-C1309 Table 1.0

This drawing forms part of the documentation for Certification: ANZEx 16.2005X Issue: 7
Alterations not authorised by Simtars may invalidate this certification.

AUSPROOF PTY LTD								
© COPYRIGHT RESERVED			DRAWN BY G.Coumessos					
DIMENSIONS (Metric-millimetre-mm) UNLESS OTHERWISE SPECIFIED	X.X 0.1 X.XX 0.05		APPROVED BY C.Taylor	DRAWING NUMBER ExB2B300-C1307	PRODUCT NAME 300 B2B Quick Release CUSTOMER COPY	0	02/05/2019	D.Jensen	Updated to IECEx Standards
ALL SURFACES TO UNLESS OTHERWISE NOTED			SIZE A3			REVISION NUMBER	REVISION DATE	REVISION BY	REVISION DESCRIPTION

Ex

Ex

FASTENER SCHEDULE JACK IN

2 x M10x1.5 x 25 LONG Z/P BUTTON HEAD SOCKET CAP SCREWS (CLASS 12.9) (6g) ISO 7380
AND 2 x M10 S/S BELLEVILLE LOCK WASHERS
USE: EARTH FIXING SCREWS FOR EARTH BRIDGE

1 x M10x1.5 Z/P NYLOC NUT (CLASS 8) (6H) ISO 4017
AND 1 x M10 Z/P WASHER (CLASS 8) (200 HV) ISO 7089
USE: TO FIX PAWL SCREW INTO B2B BODY

4 x 4GAUGE x 1/4" Z/P HAMMER DRIVE
USE: FIXING LABEL TO B2B BODY

4 x M10x1.5 x 20 LONG Z/P SET SCREWS (CLASS 4.6) (6g) ISO 4017
AND 4 x M10 B/S WASHERS (CLASS 4) (200 HV) ISO 7089
USE: FIX BASE PLATE ONTO B2B BODY

4 x M10x1.5 x 25 LONG Z/P SOCKET HEAD CAP SCREWS (CLASS 12.9) (6g) ISO 4762
USE: TO FIX B2B BODIES TOGETHER

1 x M6x1.0 x 16 LONG Z/P COUNTERSUNK SOCKET HEAD SCREW (CLASS 12.9) (6g) ISO 10642
USE: TO FIX RETAINING PLATE TO CAGE

1 x M5x0.8 x 6 LONG Z/P BUTTON HEAD SOCKET CAP SCREWS (CLASS 12.9) (6g) ISO 7380
USE: FIX ROTATION OF CAGE

FASTENER SCHEDULE QUICK RELEASE

2 x M10x1.5 x 25 LONG Z/P BUTTON HEAD SOCKET CAP SCREWS (CLASS 12.9) (6g) ISO 7380
AND 2 x M10 S/S BELLEVILLE LOCK WASHER
USE: EARTH FIXING SCREWS FOR EARTH BRIDGE

4 x 4GAUGE x 1/4" Z/P HAMMER DRIVE
USE: FIXING LABEL TO B2B BODY

4 x M10x1.5 x 20 LONG Z/P SET SCREW (CLASS 4.6) (6g) ISO 4017
AND 4 x M10 B/S WASHER (CLASS 4) (200 HV) ISO 7089
USE: FIX BASE PLATE ONTO B2B BODY

4 x M10x1.5 x 25 LONG Z/P SOCKET HEAD CAP SCREWS (CLASS 12.9) (6g) ISO 4762
USE: TO FIX B2B BODIES TOGETHER

1 x M6x1.0 x 16 LONG Z/P COUNTERSUNK SOCKET HEAD SCREW (CLASS 12.9) (6g) ISO 10642
USE: TO FIX RETAINING PLATE TO CAGE

1 x M5x0.8 x 6 LONG Z/P BUTTON HEAD SOCKET CAP SCREWS (CLASS 12.9) (6g) ISO 7380
USE: FIX ROTATION OF CAGE

2 x M16x2.0 x 20 LONG Z/P COUNTERSUNK SOCKET HEAD SCREW (CLASS 12.9) (6g) ISO 10642
USE: FIX PAWL TO QR RACK

2 x M8x1.25 x 16 LONG Z/P COUNTERSUNK SOCKET HEAD SCREW (CLASS 12.9) (6g) ISO 10642
USE: TO FIX PINION RETAINING BOSS TO PINION

2 x M8x1.25 x 35 LONG Z/P COUNTERSUNK SOCKET HEAD SCREW (CLASS 12.9) (6g) ISO 10642
USE: TO FIX QR HANDLE TO QR RACK

8 x M5x0.8 x 20 LONG Z/P SOCKET HEAD CAP SCREWS (CLASS 12.9) (6g) ISO 4762
USE: TO FIX LOCKING PIN HOUSING TO B2B BODY

THREAD CLASS TO ISO 965
COARSE THREAD PITCH TO ISO 262

This drawing forms part of the documentation for
Certification: ANZEx 16.2005X Issue: 7
Alterations not authorised by Simtars may invalidate this certification.

AUSPROOF PTY LTD

© COPYRIGHT RESERVED

DRAWN BY G.Coumessos								
DIMENSIONS (Metric-millimetre-mm) UNLESS OTHERWISE SPECIFIED	X.X 0.1 X.XX 0.05		APPROVED BY C.Taylor	DRAWING NUMBER	PRODUCT NAME	0	02/05/2019	D.Jensen	Updated to IECEx Standards
ALL SURFACES TO UNLESS OTHERWISE NOTED			SIZE A3	ExB2B300-C1308	MATERIAL SCHEDULE CUSTOMER COPY	REVISION NUMBER	REVISION DATE	REVISION BY	REVISION DESCRIPTION

Ex

Ex

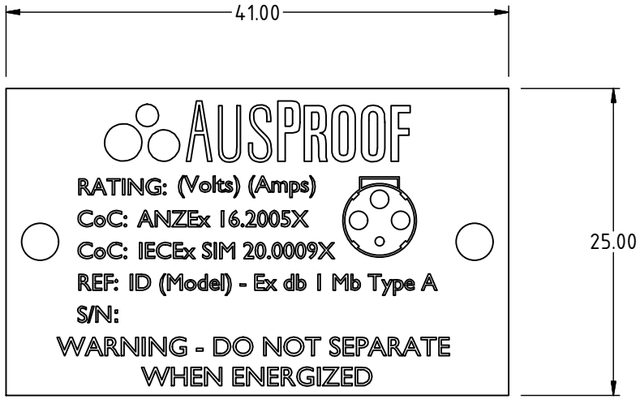

BACK TO BACK
PRODUCT DATA LABEL
AS PER TABLE 1.0

Table 1.0		
Model	Volts	Amps
BB634	660	300
BB644	660	425
BB134	1100	300
BB144	1100	425
BB136	1100	300
BB146	1100	425
BB334	3300	300
BB344	3300	425
BB336	3300	300
BB346	3300	425
QRBB634	660	300
QRBB644	660	425
QRBB134	1100	300
QRBB144	1100	425
QRBB136	1100	300
QRBB146	1100	425
QRBB334	3300	300
QRBB344	3300	425
QRBB336	3300	300
QRBB346	3300	425

This drawing forms part of the documentation for
Certification: ANZEx 16.2005X Issue: 7
Alterations not authorised by Simtars may invalidate this certification.

AUSPROOF PTY LTD

© COPYRIGHT RESERVED

DIMENSIONS (Metric-millimetre-mm) UNLESS OTHERWISE SPECIFIED ALL SURFACES TO UNLESS OTHERWISE NOTED	X.X 0.1 X.XX 0.05		DRAWN BY G.Coumessos APPROVED BY C.Taylor SIZE A3	DRAWING NUMBER ExB2B300-C1309	PRODUCT NAME Product marking labels CUSTOMER COPY	0 REVISION NUMBER	02/05/2019 REVISION DATE	D.Jensen REVISION BY	Updated to IECEx Standards REVISION DESCRIPTION

Ex

Ex

1 x M10x1.5 x 25 Z/P BHCS PN1824 (MIN Class 8.8) (6g) ISO 7380 OR A2/A4-70 STAINLESS STEEL PN10147
AND 1 x 3/8 x 1" Z/P WASHER PN1941 (Min Class 5) (140 HV) ISO 7089 OR A2/A4-70 STAINLESS STEEL PN10152
USE: TO FIX RATCHET RELEASE

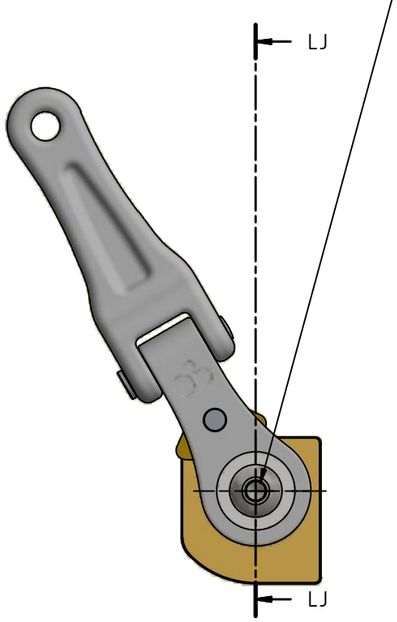

FRONT VIEW

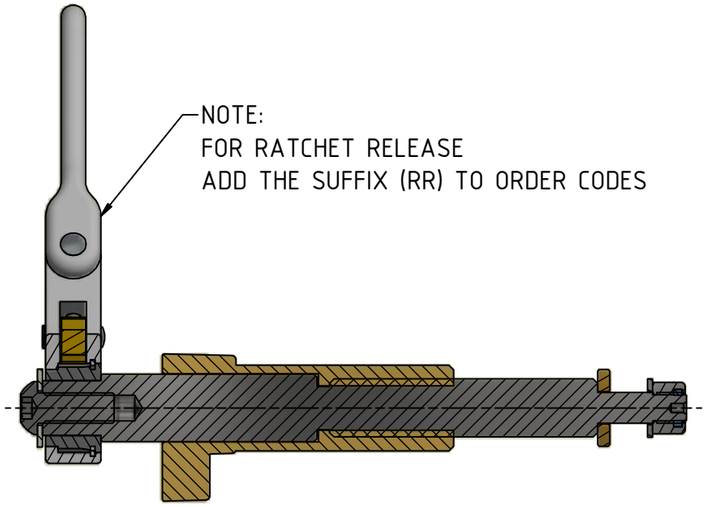

SECTION LJ-LJ

MODEL IDENTIFICATION CROSS REFERENCE TABLE
BACK TO BACK TYPE
BB634RR
BB644RR
BB134RR
BB136RR
BB144RR
BB146RR
BB334RR
BB336RR
BB344RR
BB346RR

1 x M8x1.25 x 20 Z/P SHCS PN10119 (MIN Class 8.8) (6g) ISO 4762 OR A2/A4-70 STAINLESS STEEL PN1077
USE: TO FIX RATCHET RELEASE

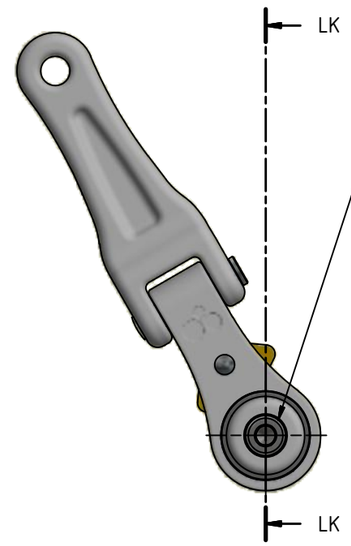

FRONT VIEW

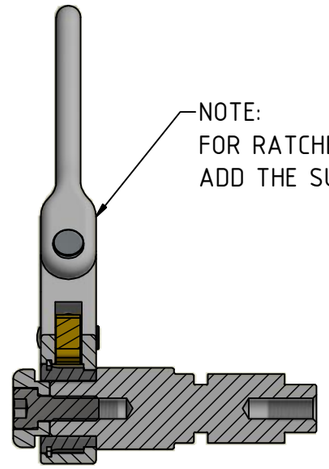

SECTION LK-LK

MODEL IDENTIFICATION CROSS REFERENCE TABLE
QUICK RELEASE BACK TO BACK TYPE
QRBB634RR
QRBB644RR
QRBB134RR
QRBB136RR
QRBB144RR
QRBB146RR
QRBB334RR
QRBB336RR
QRBB344RR
QRBB346RR

This drawing forms part of the documentation for
Certification: ANZEx 16.2005X Issue: 7
Alterations not authorised by Simtars may invalidate this certification.

AUSPROOF PTY LTD

© COPYRIGHT RESERVED

DRAWN BY C.Taylor								
DIMENSIONS (Metric-millimetre-mm) UNLESS OTHERWISE SPECIFIED	X.X 0.1 X.XX 0.05		APPROVED BY D.Jensen	DRAWING NUMBER	PRODUCT NAME	0	12/12/2024	C.Taylor	FIXED FASTENER ISO
ALL SURFACES TO UNLESS OTHERWISE NOTED			SIZE A3	ExB2B300-C1310	Common 300 B2B RR CUSTOMER COPY	REVISION NUMBER	REVISION DATE	REVISION BY	REVISION DESCRIPTION

Ex

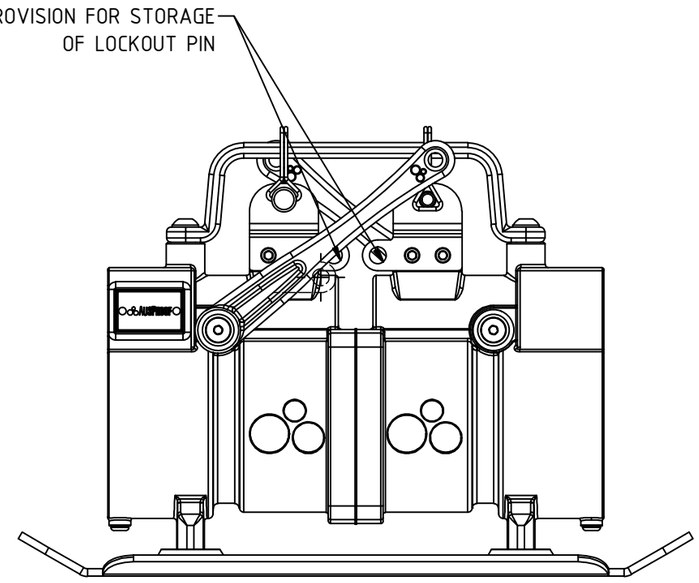

SIDE VIEW

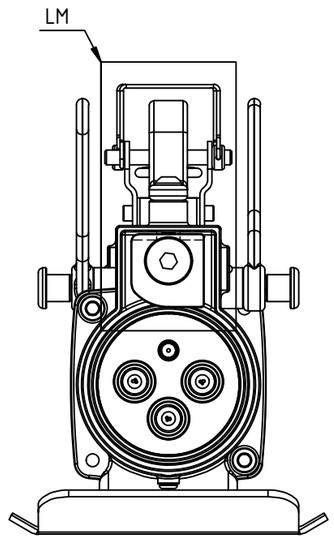

FRONT VIEW

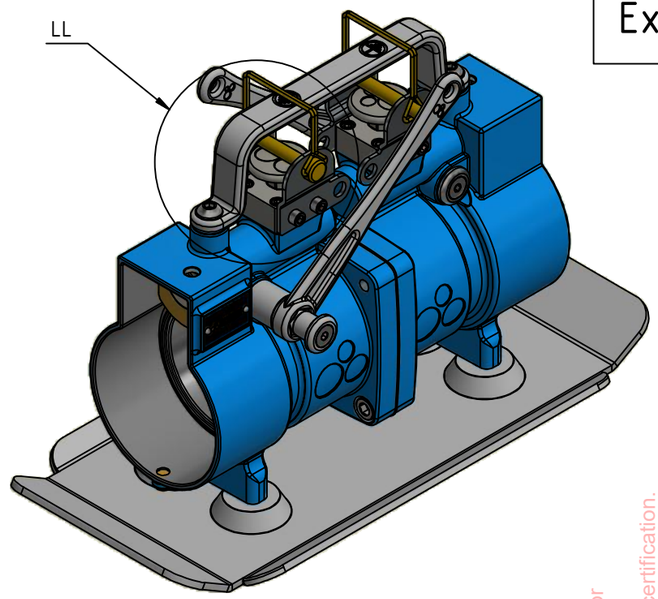

ISOMETRIC VIEW

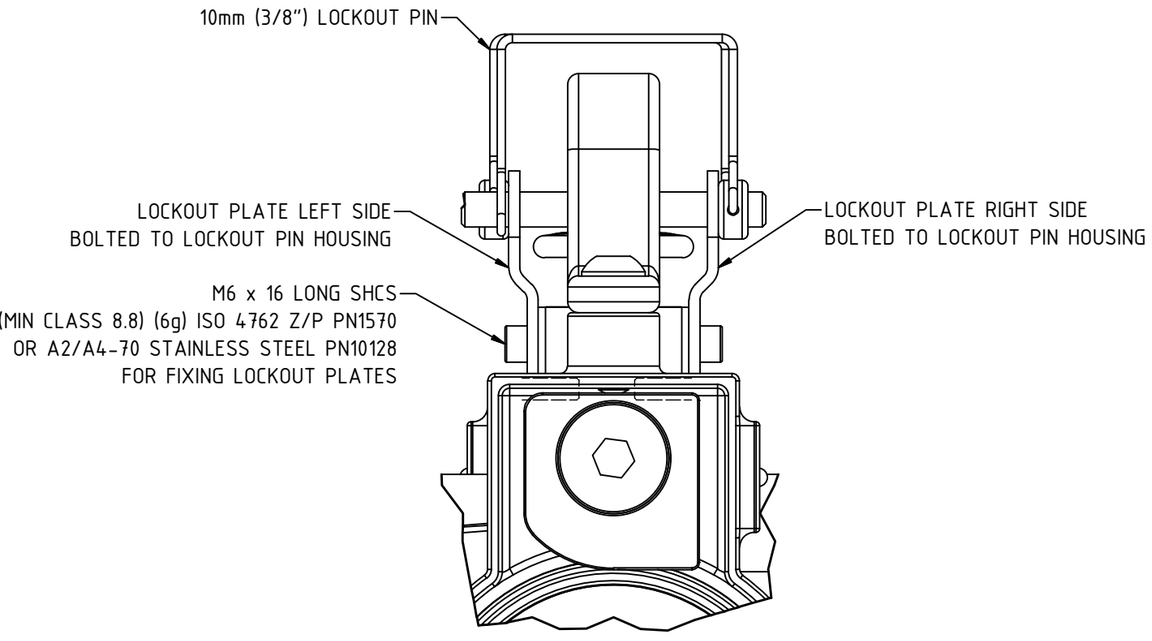

DETAIL LM

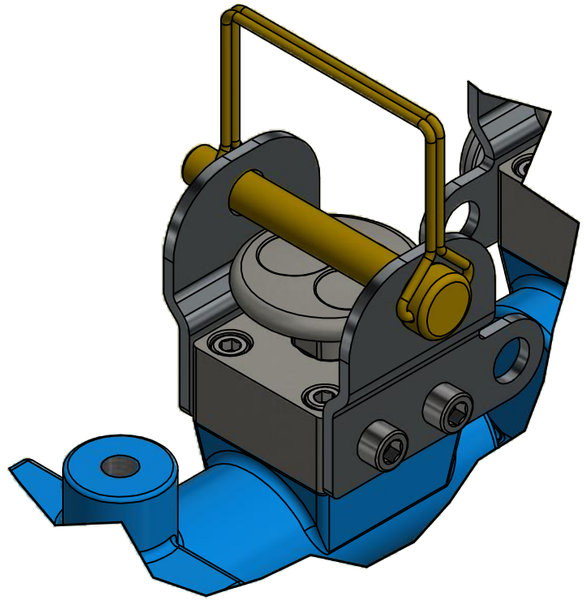

DETAIL LL
WITH EARTH BRIDGE AND RACKING
HANDLES REMOVED FOR CLARITY
SIMILAR FOR BOTH RECEPTICALES

This drawing forms part of the documentation for
Certification: ANZEx 16.2005X Issue: 7
Alterations not authorised by Simtars may invalidate this certification.

Ex

AUSPROOF PTY LTD

© COPYRIGHT RESERVED

DIMENSIONS (Metric-millimetre-mm) UNLESS OTHERWISE SPECIFIED ALL SURFACES TO UNLESS OTHERWISE NOTED	X.X 0.1 X.XX 0.05		DRAWN BY D.Jensen APPROVED BY C.Taylor SIZE A3	DRAWING NUMBER ExB2B300-C1311	PRODUCT NAME 300 B2B Pin Lockout CUSTOMER COPY	0 REVISION NUMBER	12/12/2024 REVISION DATE	D.Jensen REVISION BY	INITIAL RELEASE REVISION DESCRIPTION